Tractel®

TRACTEL SOLUTIONS

SPECIAL PRODUCTS

- Bottom Blocks
- Off-shore Products
- Sheaves and Hooks
- Coil Manutention
- Lifting Beams
- Load Turners
- Special Clamps

www.tractel.com

INTRODUCTION

For many years, TRACTEL Solutions has specialized in designing, manufacturing & selling customized lifting & handling equipment for the industry.

This catalogue is intended to provide you with an overview of our product range as well as technical details to facilitate the equipment definition.

We design and manufacture our products according to the FEM duty and NF EN 13001 and on request can be manufactured following all other European and international standards. (ISO, ASME, BS, DIN, NF ...)

For more details about our products & customized solutions, please contact our sales representatives & design department, we will be glad to design the equipment you need.

Emmanuel TRIPIER
Operations manager
Tractel Solutions

CONTACTS

Salesmen	Phone/Fax	E-mail
Franck DERDERIAN	+33 472 66 24 80	franck.derderian@tractel.com
Guy MARCEL	+33 4 72 66 24 88	guy.marcel@tractel.com
Customer service		
Aurélie LEDUC	+33 4 72 66 25 40	aurelie.leduc@tractel.com
Martine DE BRUIJN	+33 4 72 66 24 90	martine.debruijn@tractel.com
Bastien FAURE	+33 4 72 66 24 97	bastien.faure@tractel.com
Special TOPAL project leader		
Michel DARROT	+33 4 72 66 25 46	michel.darrot@tractel.com
Sales manager		
Emmanuel TRIPIER	+33 4 72 66 24 81	emmanuel.tripier@tractel.com
Maintenance and service		
Gilles PETIT	+33 4 72 66 24 93	gilles.petit@tractel.com

info.tractelsolutions@tractel.com

TABLE OF CONTENTS

INTRODUCTION 2
CONTACTS 3
TABLE OF CONTENTS 4
CRANE BOTTOM BLOCKS 6
- DP - 2 sheave bottom block for overhead crane 6
- DP - 4 sheave bottom block for overhead crane 8
- Multi sheave bottom blocks up to 500 tons for overhead cranes 10
- CHB/CHA - 2 sheaves bottom block for hoist/crane 11

WEIGHING BLOCKS 12
- Bottom blocks with load weighing device 12
- Dynablock 13

MOTORIZED BOTTOM BLOCKS 14
- 2 sheaves bottom blocks with motorized suspension 15
- 4 sheaves bottom blocks with motorized suspension 16

SPECIAL BOTTOM BLOCKS 17
- Special features 17
- Bottom block with shock absorber 18
- Bottom block with automatic hook 18
- Stainless Steel and galvanized Bottom Blocks 19
- Bronze coated Bottom block 19

MOBILE CRANE BLOCKS 20
- Range 21
- Suspension system for mobile crane 22

OFF SHORE 23
- Hauling blocks 24
- Single or multi sheaves snatch blocks - from 1 to 250 tons 25
- Swivels 26
- Wire rope Fairleads 27
- Vertical deck sheave 28
- Horizontal deck sheave 28
- Multi angle Fairleads 29
- Miscellaneous blocks and sheaves 29

SHEAVES 30
- CSB – Sheaves with ball bearings 30
- CBB – Welded sheaves with ball bearings 31
- CBR – Cold formed laminated steel sheave with cylindrical roller bearing 32
- CBR – Cold formed laminated steel sheave with ball bearings, seals, covers and sleeve 33

HOOKS AND SUSPENSIONS 34
- Hooks with non-machined shank 34
- Hooks Dimensions 35
- CS: Single hooks according to DIN 15401 36
- CD: Double hooks according to DIN 15402 37
- CZ: Suspension system with thrust ball bearing crosshead 38
- Suspension fittings: device for rotation locking 39
- Safety Latchs 39
- Laminated point hooks 40

COIL MANUTENTION 41
- C-hooks 41
- Telescopic coil grab 42
- Bundles grab 42

LIFTING BEAMS 44
- H shaped lifting beam adjustable on request 44

TABLE OF CONTENTS

44t Lifting beam for paper rolls with motorized rotation 45
160t lifting beam with integrated sheaves and motorized hook 45
20/40 feet Spreader 46
Special beam 47
Lifting beam with adjustable lifting points 47
LOAD TURNER PAL-TURN™ 48
Standard load turner device 50
Advantages 51
Optimised design 51
Try it ! 51
SPECIAL CLAMPS 52
Clamp for loads with parallel sides 52
Semi-automatic clamp for handling rounds or cylinders 52
Automatic clamp for handling rounds or cylinders 52
Semi-automatic clamp for tubes and pipes 53
Clamp for lifting and turning steel drums 53
Automatic clamp for lifting and turning steel drums 53
Automatic clamp for lifting and turning cylindrical loads 53
CONDITIONS GENERALES DE VENTE SUR LE TERRITOIRE FRANÇAIS 54
CONDITIONS GENERALES DE VENTES EXPORT 55

CRANE BOTTOM BLOCKS

Tractel Solutions SAS proposes a wide range of custom made bottom blocks.

DP - 2 sheave bottom block for overhead crane

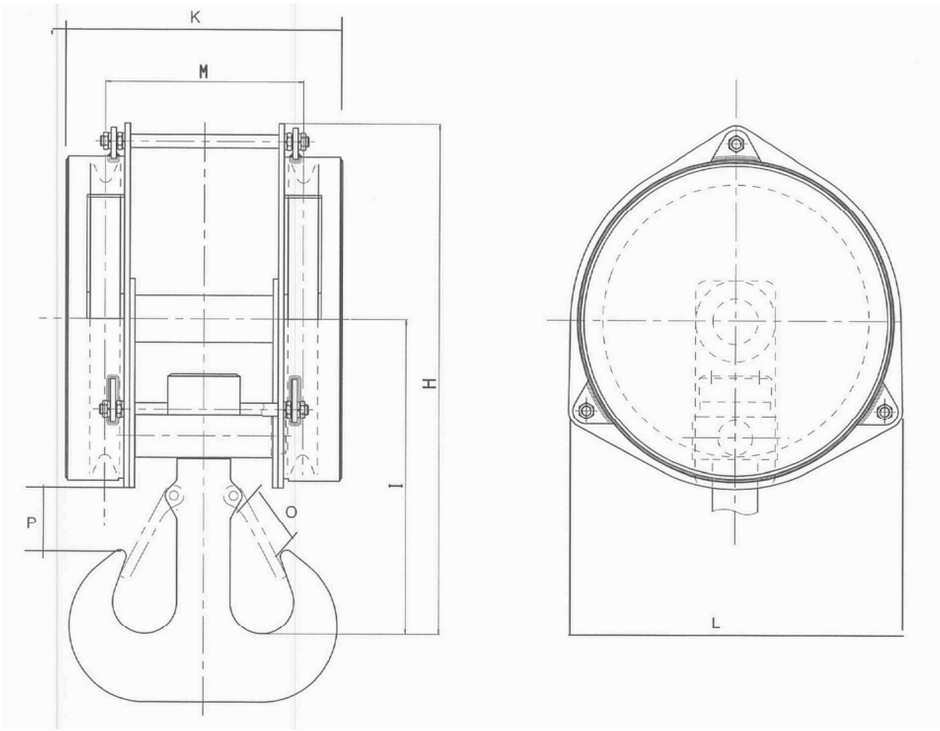

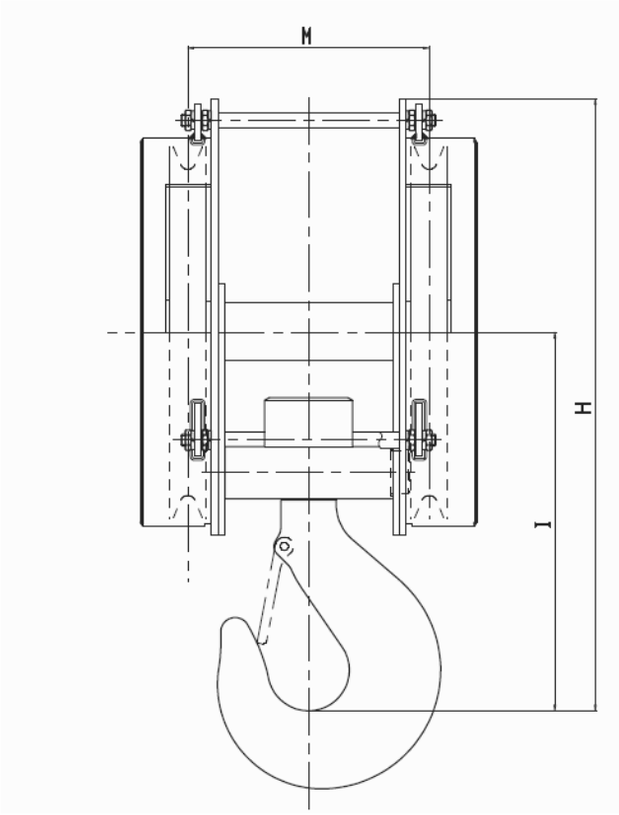

CRANE BOTTOM BLOCKS

WLL according to FEM duty dated 1987	M3	6.3t	8t	10t	16t	-	16t	-	25t	25t	32t	32t	40t
	M4	-	6.3t	8t		12t	12t	16t	20t	20t	25t	25t	32t
	M5	-	-	-	-	10t	10t	12t	16t	16t	-	20t	-
	M6	-	-	-	-	8t	-	10t	-	-	-	-	-
	M7	-	-	-	-	-	-	-	-	-	-	-	-
	M8	-	-	-	-	-	-	-	-	-	-	-	-
Tread sheave diam		160	186	220	276	286	286	310	310	355	355	420	420
Wire rope diam		10	11	11	16	12	14	14	16	18	20	21	23
Groove diam		10.6	11.7	11.7	17	12.7	14.8	14.8	17	19.1	21.2	22.2	24.3
Winding ratio		16	18	18	18	22.4	20	22.4	20	20	18	20	18
DIN hook n°		4P	4P	5P	6P	6P	6P	8P	10P	10P	12P	12P	16P
Axis to axis 2 sheaves	M	149	188	215	240	244	244	270	270	293	293	320	320
Overall block thickness	K	205	265	290	325	330	330	360	360	390	390	440	440
Flange width	L	230	270	335	386	386	386	440	440	495	495	550	550
Height, inside hook to top	H	345	420	540	660	660	660	690	720	755	815	932	975
Height, inside hook to sheave spindle	I	250	290	350	435	435	435	460	485	505	535	592	635
Opening with latch	O	51	51	58	68	68	68	77	87	87	97	97	109
Clearence with single hook	P	60	73	90	128	128	128	140	160	145	160	160	180
Appr. Weight with single hook		29kg	39kg	60kg	105kg	110kg	110kg	140kg	160kg	172kg	190kg	250kg	300kg
References													
With single hook		D000P	D010P	D020P	D030P	D040P	D050P	D060P	D070P	D100P	D110P	D120P	D130P
With double hook		D001P	D011P	D021P	D031P	D041P	D051P	D061P	D071P	D101P	D111P	D121P	D131P

WLL according to FEM duty dated 1987	M3	-	-	40t	-	-	-	63t	-	-	-	100t		
	M4	-	32t	32t	-	-	40t	50t	-	-	63t	80t	-	-
	M5	-	25t	25t	-	-	32t	40t	-	-	50t	63t	-	-
	M6	16t	-	-	16t	20t	-	-	25t	32t	-	-	32t	40t
	M7	12.5t	-	-	12.5t	16t	-	-	20t	25t	-	-	25t	32t
	M8	-	-	-	10t	-	-	-	16t	-	-	-	20t	-
Tread sheave diam		450	450	450	572	572	572	572	680	680	680	680	710	710
Wire rope diam		18	20	22	20	23	25	28	25	28	30	34	28	32
Groove diam		19.1	21.2	23.3	21.2	24.3	26.5	29.7	26.5	29.7	31.8	36	29.7	34
Winding ratio		25	22.4	20	28	25	22.4	20	28	25	22.4	20	25	22.4
DIN hook n°		12P	16P	16P	12P	16P	20P	25P	20P	25P	32P	40P	25P	32P
Axis to axis 2 sheaves	M	354	354	354	490	490	490	490	540	540	540	540	592	592
Overall block thickness	K	465	465	465	610	610	610	610	910	910	910	910	940	940
Flange width	L	595	595	595	740	740	740	740	780	780	780	780	910	910
Height, inside hook to top	H	970	1000	1000	1050	1090	1150	1185	1370	1420	1410	1450	1315	1370
Height, inside hook to sheave spindle	I	530	650	650	663	703	763	798	900	938	900	930	840	888
Opening with latch	O	87	109	109	87	97	122	137	109	122	157	170	122	137
Clearence with single hook	P	170	208	208	145	160	208	228	180	208	255	270	195	210
Appr. Weight with single hook		250kg	310kg	310kg	205kg	347kg	445kg	570kg	620kg	650kg	880kg	1020kg	740kg	820kg
References														
With single hook		D140P	D150P	D160P	D200P	D210P	D220P	D230P	D240P	D250P	D260P	D270P	D280P	D290P
With double hook		D141P	D151P	D161P	D201P	D211P	D221P	D231P	D241P	D251P	D261P	D271P	D281P	D291P

CRANE BOTTOM BLOCKS

DP - 4 sheave bottom block for overhead crane

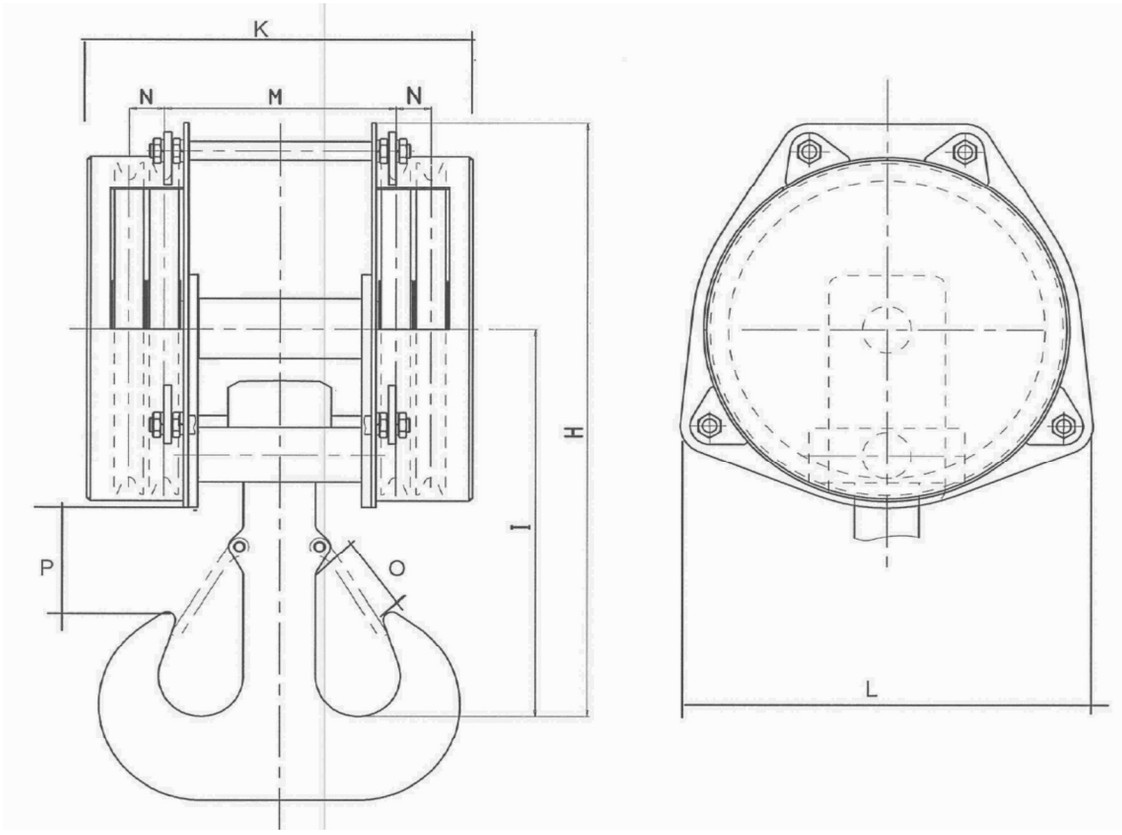

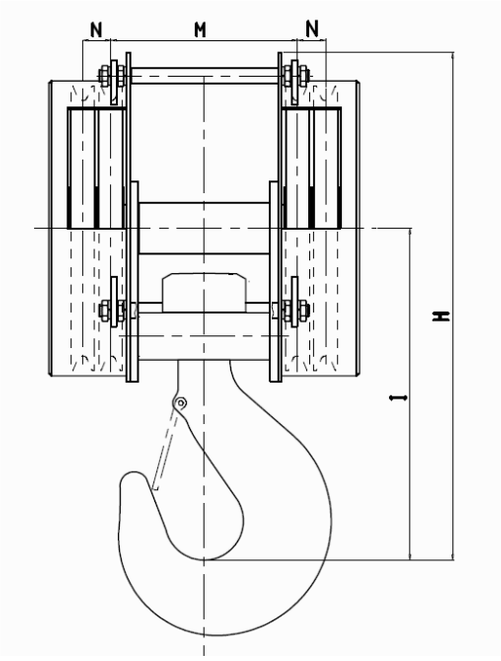

For a design with more than 4 sheaves, please consult us.

CRANE BOTTOM BLOCKS

WLL according to FEM duty dated 1987	M3	16t	20t	-	32t	40t	-	50t	-	-		80t
	M4	12t	16t	20t	25t	32t	-	40t	-	-	-	63t
	M5	10t	12t	16t	20t	25t	32t	32t	-	-	40t	50t
	M6	-	12t	16t	20t	-	32t	-	32t	25t	40t	-
	M7	-	-	-	-	-	25t	-	25t	20t	32t	-
	M8	-	-	-	-	-	-	-	20t	16t	-	-
Specifications												
Tread sheave diam		220	276	286	286	310	310	355	355	450	450	450
Wire rope diam		10	16	12	14	14	16	18	20	18	20	22
Groove diam		10.6	17	12.7	14.8	14.8	17	19.1	21.2	18	20	22
Winding ratio		22	18	22.4	20	22.4	20	20	18	25	22.4	20
DIN hook n°		6P	8P	10P	12P	16P	20P	20P	25P	20P	25P	32P
Axis to axis 2 sheaves	M	244	294	294	294	367	367	367	367	478	478	478
Axis to axis 2 adjacent sheaves	N	45	45	55	55	70	70	70	70	80	80	80
Overall block thickness	K	410	474	474	474	590	590	590	590	725	725	725
Flange width	L	355	386	392	392	470	470	495	495	595	595	595
Height, inside hook to top	H	636	735	745	775	850	900	970	1040	1023	1125	1175
Height, inside hook to sheave spindle	I	448	510	515	540	570	620	690	760	683	785	835
Opening with latch	O	77	87	87	97	109	122	122	122	109	137	157
Clearence with single hook	P	128	145	145	160	180	208	208	208	180	228	255
Appr. Weight with single hook		115kg	172kg	183kg	195kg	250kg	300kg	325kg	325kg	380kg	515kg	590kg
References												
With single hook		D005P	D015P0	D025P	D035P	D045P	D055P	D065P	D075P	D085P	D095P	D105P
With double hook		D006P	D016P	D026P	D036P	D046P	D056P	D066P	D076P	D086P	D096P	D106P

WLL according to FEM duty dated 1987	M3	-	-	-	125t	-	-	-	140t	-	200t
	M4	-	-	80t	100t	-	-	125t	125t	160t	160t
	M5	40t	50t	63t	80t	-	80t	100t	100t	125t	125t
	M6	40t	50t	63t	-	50t	80t	100t	-	125t	-
	M7	32t	40t	T	-	40t	63t	-	-	100t	-
	M8	25t	32t	t	-	32t	-	-	-	-	-
Specifications											
Tread sheave diam		572	572	572	572	680	680	680	680	710	710
Wire rope diam		20	23	25	28	25	28	30	34	36	40
Groove diam		21.2	24.3	26.5	29.7	26.5	29.7	31.8	36	38.2	42.5
Winding ratio		28	25	22.4	20	28	25	22.4	20	20	18
DIN hook n°		25P	32P	40P	50P	40P	50P	63P	63P	80P	80P
Axis to axis 2 sheaves	M	592	592	592	592	592	592	592	592	610	610
Axis to axis 2 adjacent sheaves	N	100	100	100	100	120	120	120	120	120	120
Overall block thickness	K	890	890	890	890	972	972	972	972	972	972
Flange width	L	740	740	740	740	900	900	900	900	910	910
Height, inside hook to top	H	1185	1235	1340	1415	1435	1510	1600	1600	1540	1540
Height, inside hook to sheave spindle	I	798	848	953	1028	970	1050	1150	1150	1070	1070
Opening with latch	O	137	157	175	195	157	195	180	180	240	240
Clearence with single hook	P	228	255	223	320	250	310	420	420	400	400
Appr. Weight with single hook		712kg	800kg	950kg	1100kg	1100kg	1450kg	1800kg	1800kg	2400kg	2400kg
References											
With single hook		D115P	D125P	D135P	D145P	D155P	D165P	D175P	D185P	D195P	D205P
With double hook		D116P	D126P	D136P	D146P	D156P	D166P	D176P	D186P	D196P	D206P

CRANE BOTTOM BLOCKS

Multi sheave bottom blocks up to 500 tons for overhead cranes

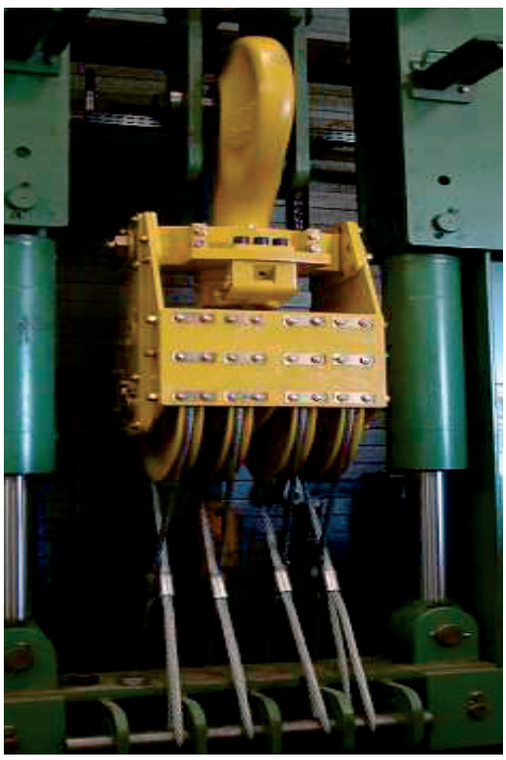

Test load bench up to 150 t

CRANE BOTTOM BLOCKS

CHB/CHA - 2 sheaves bottom block for hoist/crane

Reference	Size	Hook Nr DIN15401	ØA/ØB (min)	Ø wire min/max (mm)	M5	M6	C mm	D mm	Weight (kg)
CHB122	02	1.6V	152/175	7	3.2	2.5	142	262	17
				8					
CHB132	03	2.5T	172/200	8	4	3.2	167	295	25
				9					
CHB142	04	2.5T	180/210	9	5	4	172	295	27
				10					
CHB172	07	5T	250/297	12	10	8	220	373	65
				13					
CHA152	05	4T	200/235	10	6.3	5	190	328	45
				11					
CHA162	06	4T	228/270	11	8	6.3	215	346	64
				12					
CHA172	07	5T	257/297	12	10	8	235	373	76
				13					
CHA182	08	6T	280/330	13	12.5	10	268	450	120
				14					
CHA192	09	8T	320/375	15	16	12.5	291	484	152
				16					
CHA202	10	10T	355/425	17	20	16	320	530	215
				18					
CHA212	11	12T	400/470	19	25	20	360	600	270
				20					

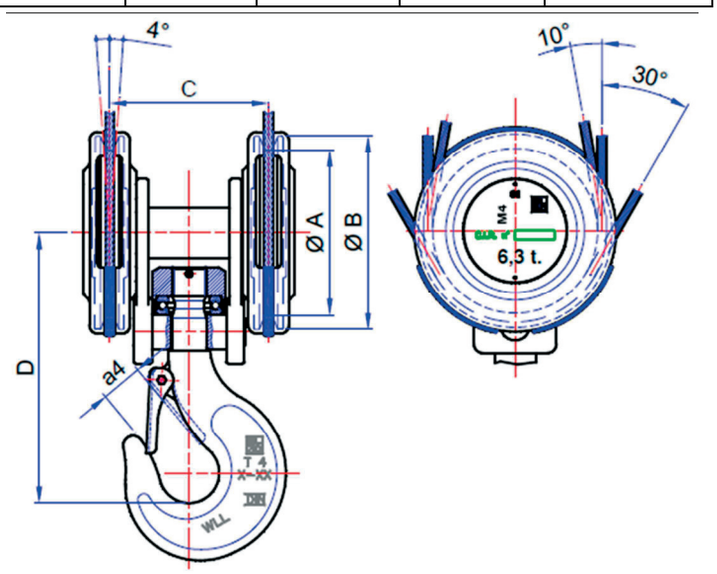

Other dimensions upon request

WEIGHING BLOCKS

Bottom blocks with load weighing device

- Accuracy down to 0.2% of the WLL
- Large digital display
- Available for any capacity up to FEM M8

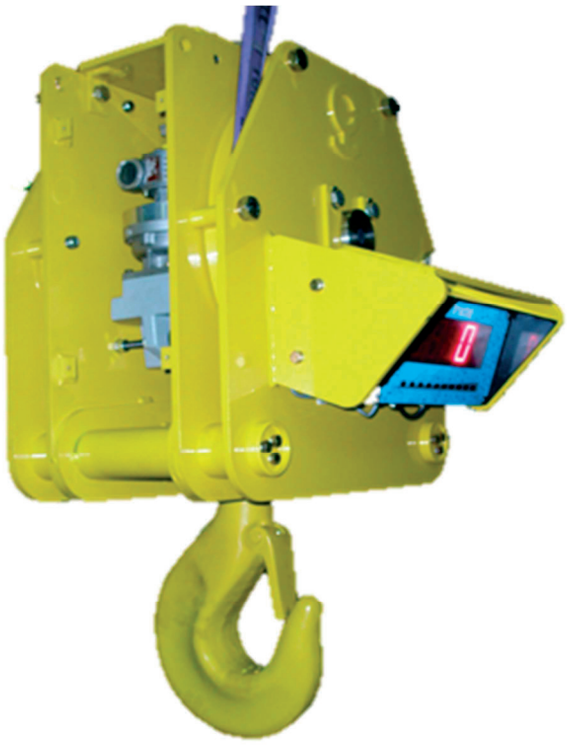

Dynablock

Hookblock with load indicator - For small capacities, all in hand

Flexibility, ergonomy, accuracy and autonomy are the main assets of this range
The Dynablocks allow electronic load measurement of tensile forces (N) and determine hanging loads (kg).

- 80m range wireless connection (or more with special antenna)
- The display can be attached to overhead crane's remote control, thanks to a special adapter
- Integrated LCD display with backlight, wireless handheld display on request
- Power supply :
  - Receiver : battery + charger
  - Transmitter : 3 AA batteries
  - Up to 1000h battery autonomy
- **No need to have a cable drum, savings on installation**
- **The dynablock can be installed to replace any standard hookblock without modification of the overhead crane**
- Simultaneous reading of several sensors on one or several displays
- Accuracy: down to 0.2% of the WLL. (Better accuracy on request)
- All capacites on request

MOTORIZED BOTTOM BLOCKS

Multiply the functionalities of your travelling cranes, motorise the hook!
For lifting, turning and positioning of the load at distance. Designed to handle all capacities just to FEM group 8.

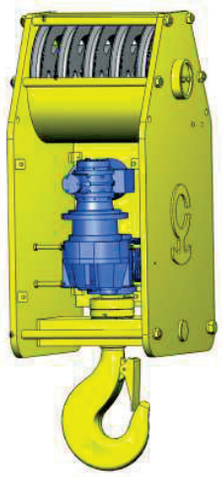

Standard design

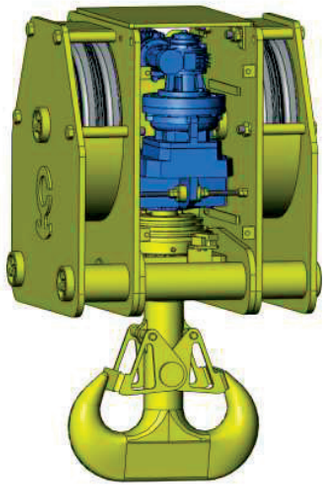

Compact design

Handle to disengage manually the latch

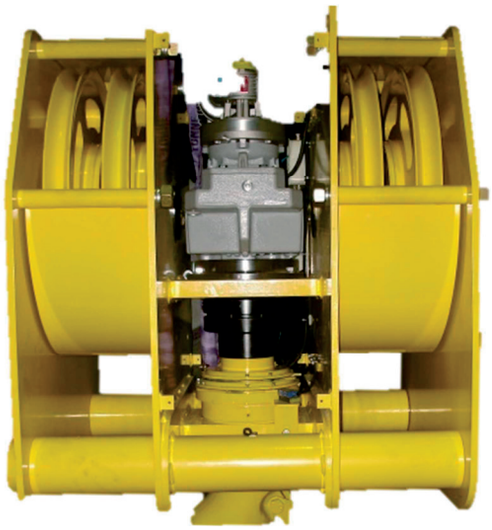

Hook driving with electromagnetic latch

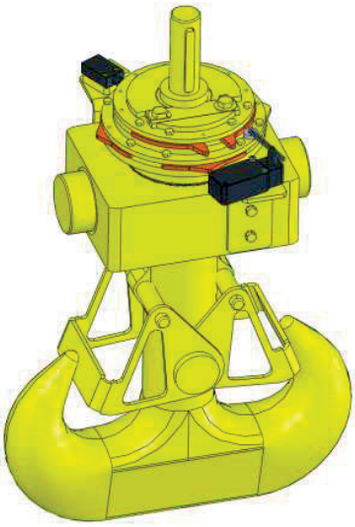

Electric stop

Special design

2 sheaves bottom blocks with motorized suspension

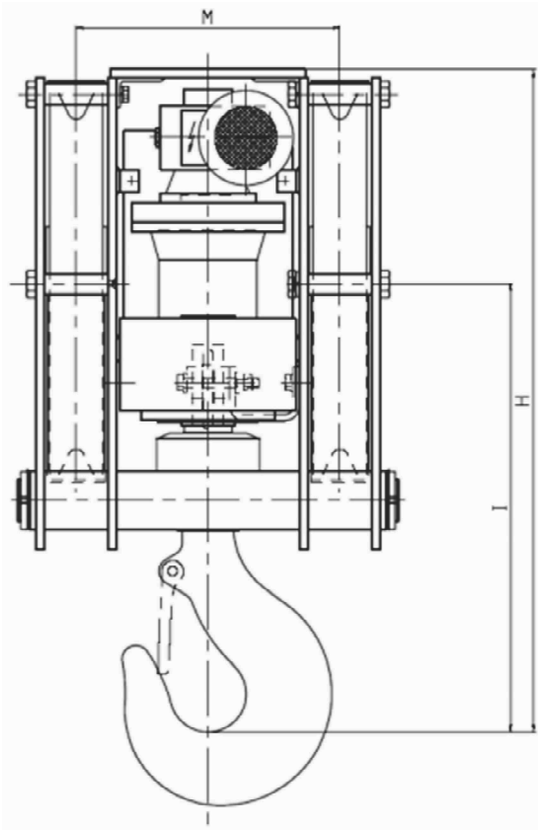

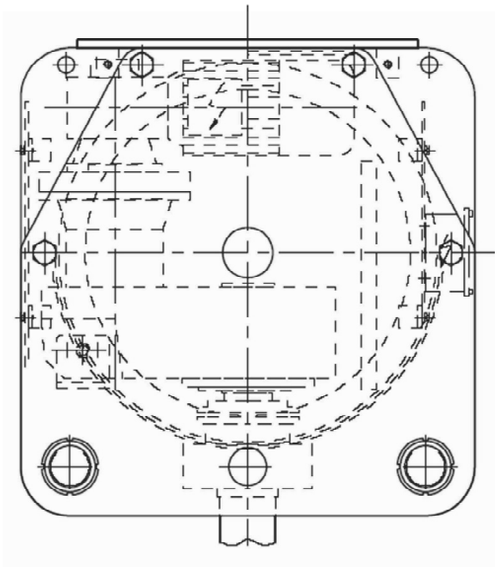

- To lift and position the load without manual operation
- Compact design
- Designed with single hook according to DIN 15401/ ramshorn hook according to DIN 15402
- Rotation means of motor gear unit
- Integrated weighing device on request

2 Sheaves bottom blocks										
Capacity according to FEM duty dated 1987	M3	10t	12t	16t	20t	25t	32t	40t	50t	50t
	M4	8t	10t	12t	16t	20t	25t	32t	40t	40t
	M5	6.3t	8t	10t	12t	16t	20t	25t	32t	32t
	M6	5t	6.3t	8t	10t	12t	16t	20t	25t	25t
	M7	4t	5t	6.3t	8t	10t	12t	16t	20t	20t
Sheave bottom of groove diameter		220	286	310	355	420	450	572	572	680
Sheave center (mm)	M	270	290	290	310	310	370	390	410	410
Wire rope diameter according to winding ratio (mm)	16	14	18	20	22	26	28	36	36	44
	18	12	16	18	20	23	25	32	32	40
	20	11	14	16	18	21	22	28	28	36
	22.4	10	12	14	16	18	20	25	25	32
	25	9	11	13	14	17	18	23	23	28
DIN hook size		4P	5P	6P	8P	10P	12P	16P	20P	20P
Reference with single hook		H211R	H212R	H213R	H214R	H215R	H216R	H217R	H218R	H219R
Reference with double hook		H221R	H222R	H223R	H224R	H225R	H226R	H227R	H228R	H229R

MOTORIZED BOTTOM BLOCKS

4 sheaves bottom blocks with motorized suspension

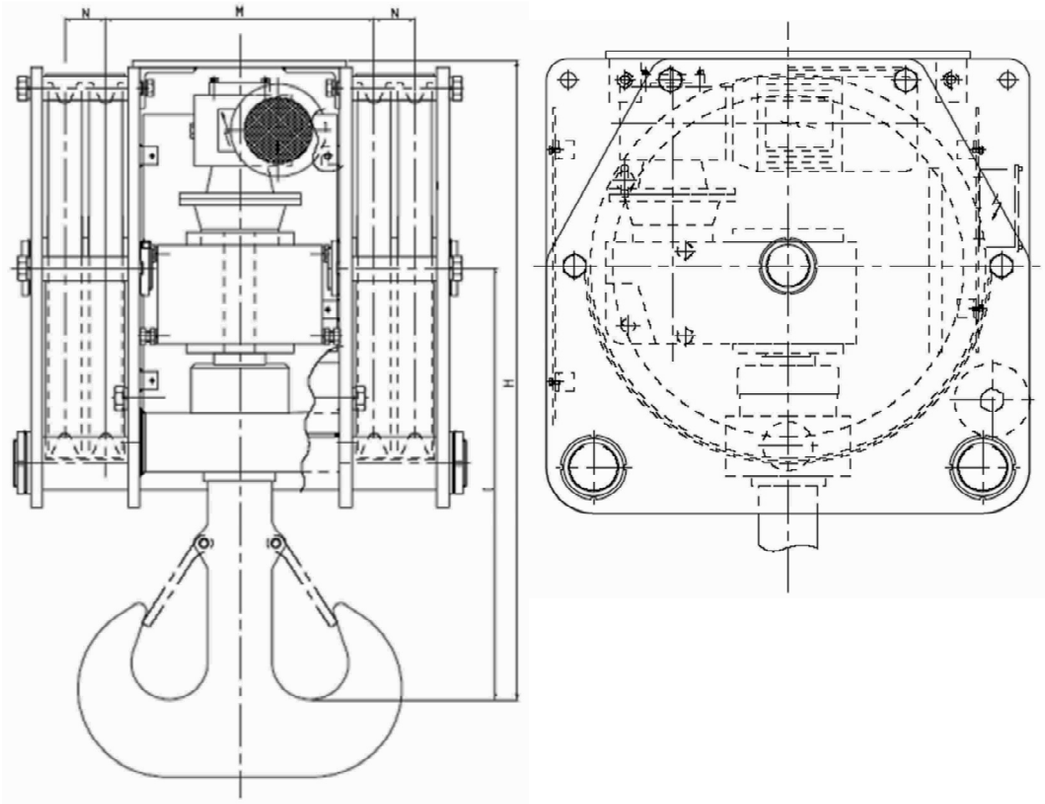

4 Sheaves bottom blocks										
Capacity according to FEM duty dated 1987	M3	20t	25t	32t	40t	50t	63t	80t	100t	125t
	M4	16t	20t	25t	32t	40t	50t	63t	80t	100t
	M5	12t	16t	20t	25t	32t	40t	50t	63t	80t
	M6	10t	12t	16t	20t	25t	32t	40t	50t	63t
	M7	8t	10t	12t	16t	20t	25t	32t	40t	50t
Sheave bottom of groove diameter		220	286	310	355	420	450	572	572	680
Sheave center (mm)	M	340	390	390	390	410	410	470	470	515
	N	70	70	80	80	85	85	100	100	100
Wire rope diameter according to winding ratio (mm)	16	12	16	18	20	23	25	32	40	40
	18	11	14	16	18	21	22	28	36	36
	20	10	12	14	16	18	20	25	32	32
	22.4	9	11	13	14	17	18	23	28	28
	25	8	10	11	13	15	16	20	25	25
DIN hook size		8P	10P	12P	16P	20P	25P	32P	40P	50P
Reference with single hook		H411R	H412R	H413R	H414R	H415R	H416R	H417R	H418R	H419R
Reference with double hook		H421R	H422R	H423R	H424R	H425R	H426R	H427R	H428R	H429R

For a design with more than 4 sheaves, please consult us.

Special features

- Groove hardness from 300 up to 450 HB
- Thermic shield
- Special lubrication
- Suspension such as single hook, double hook, female jaw, pin,
- Mechanical stop in rotation of suspension
- Redundancy in design for sheave axis, crosshead and hook threads
- Sheaves positioned at 45° for special reeving
- Electrical slip-rings
- Electrical insulation
- Painted in RAL 1004 as regular finishing
- Marine paint
- Zinc coating
- Decontaminate coating
- Bronze coating

Bottom block with shock absorber

Bottom block with automatic hook

Stainless Steel and galvanized Bottom Blocks

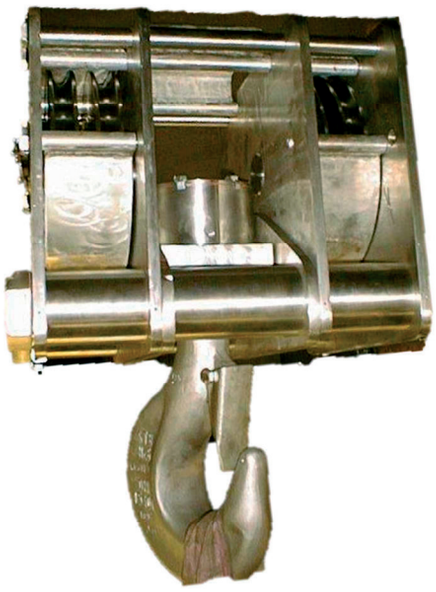

Galvanised bottom block

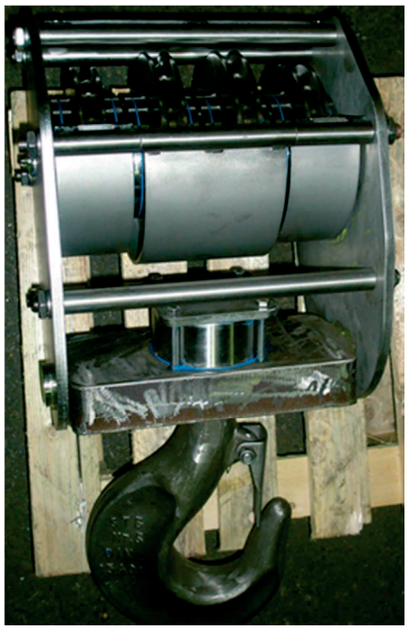

Stainless steel bottom block

Bronze coated Bottom block

MOBILE CRANE BLOCKS

For safe working conditions

Removable outer casing enables easy modification of rope falls and visual maintenance of the sheaves.

Outer casing are closed for hand protection.

Lifting handles are flame cut into flanges.

Axle ends and nuts are sunk into flanges to prevent any risk of fouling.

On request

Other types of suspensions.

Different flanges weights to increase the block load for free fall application.

Other winding ratio in accordance with other standards.

- Block for mobile crane
- SWL: 8t – 200t
- From 1 to 9 sheaves
- Other items on request.
- Designed with standards sub-assembly to comply with safety rules (DIN, NF, FEM, SO, BS, UNI...)

A reliable product

No load bearing weld.

Stamped hook according to DIN 15401 or 15402.

Steel class N, P, T, V with safety latch.

Winding ratio in accordance with local rules and wire rope quality.

Design is adapted to:

- Transportation
- Storage: can be stored on its bottom when folding on the hook
- Safety: high end run of the hook, axle ends and nuts are sunk into flanges, signalization painting, hand holds are flame cut into flanges for easy handling.

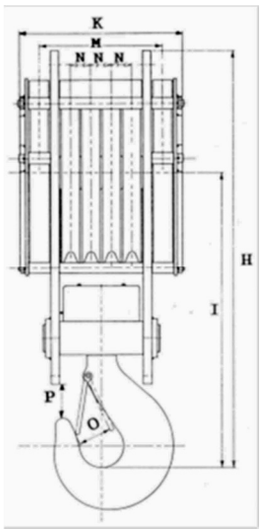

These crane blocks have been designed in accordance with the M3 group of the FEM 1987 and with the winding ration = 22 according to the French decree of 1965

MOBILE CRANE BLOCKS

Range

		1 sheave blocks							2 sheaves blocks			
WLL		8t	12.5t	16t	18t	20t	25t	32t	10t	16t	20t	25t
SPECIFICATIONS												
External sheave diameter		354	420	480	480	530	654	654	336	354	420	480
Bottom of groove diameter		310	355	420	420	450	572	572	286	310	355	420
Wire rope diameter		14	16	19	19	20	25	25	13	14	16	19
Hook size		4P	4T	4T	5T	5T	6T	8T	4P	8P	5T	8T
Height (from hook to top)	H	712	850	945	966	980	1200	1240	730	890	992	1090
Height (from hook to sheave spindle)	I	456	500	580	615	610	760	800	500	630	633	730
Overall block thickness	K	180	200	218	244	234	260	280	200	237	250	277
Overall width	L	425	500	560	560	590	750	750	410	424	515	560
Total sheave distance	M	-	-	-	-	-	-	-	60	69	66	60
Sheave distance	N	-	-	-	-	-	-	-				
Opening with latch	O	51	51	51	58	58	66	76	51	76	58	76
Clearance with single hook	P	45	45	45	60	60	78	78	94	103	97	108
Approx weight with single hook		100kg	140kg	150kg	275kg	320kg	450kg	500kg	100kg	200kg	310kg	400kg
Ref GM		G903M	G906M	G965M	G963M	G970M	G977M	G957M	G978M	G975M	G979M	G976M

		3 sheaves blocks				4 sheaves blocks			5 sheaves blocks		
WLL		18t	32/40t	45/50t	63/70t	18/20t	37/40t	57/60t	32t	50t	63t
SPECIFICATIONS											
External sheave diameter		354	480	530	654	354	480	530	354	480	572
Bottom of groove diameter		310	420	450	572	310	420	450	310	420	450
Wire rope diameter		13	19	20	25	13	19	20	14	18	25
Hook size		5T	10T	12T	16V	5T	10T	12V	8T	12T	16T
Height (from hook to top)	H	786	1087	1180	1420	786	1087	1180	885	1175	1420
Height (from hook to sheave spindle)	I	530	735	808	980	530	736	808	620	812	980
Overall block thickness	K	300	357	345	352	330	356	350	410	412	420
Overall width	L	425	560	590	750	425	560	590	425	560	750
Total sheave distance	M	50	58	60	80	-	-	-	340	400	540
Sheave distance	N	-	-	-	-	50	58	60	50	58	60
Opening with latch	O	57	85	95	105	57	85	95	76	95	105
Clearance with single hook	P	60	80	105	128	60	80	105	82	103	130
Approx weight with single hook		200kg	415kg	575kg	750kg	250kg	425kg	600kg	350kg	525kg	840kg
Ref GM		G961M	G956M	G967M	G952M	G962M	G968M	G974M	G958M	G954M	G980M

		6 sheaves blocks		7 sheaves blocks		9 sheaves blocks
WLL		60t	100t	70t	140t	200t
SPECIFICATIONS						
External sheave diameter		480	654	480	654	775
Bottom of groove diameter		420	572	420	572	680
Wire rope diameter		19	25	19	25	30
Hook size		12V	20V	16V	32V	40V
Height (from hook to top)	H	1165	1506	1236	1644	1820
Height (from hook to sheave spindle)	I	812	1066	885	1204	1400
Overall block thickness	K	485	587	558	743	810
Overall width	L	560	750	560	750	880
Total sheave distance	M	360	400	360	560	630
Sheave distance	N	52	74	52	92	74
Opening with latch	O	95	120	105	150	170
Clearance with single hook	P	92	130	125	175	190
Approx weight with single hook		700kg	975kg	825kg	1200kg	1500kg
Ref GM		G969M	G951M	G953M	G950M	G981M

Other blocks on request

Suspension system for mobile crane

GM Swivel overhaul ball
WLL: 4 to 12.5t

Lifting fitting for one part line applications on a mobile crane
Made of GS 400-12 cast iron, different weights for overhauling when free fall.
Equipped with a swivel single hook to prevent wire rope from spinning.
Wire rope can be fixed with a wedge socket or a shackle.

Type → GM					
WLL	4t	6.3t	10t		12.5t
Hook size	1.6P	2.5P	4P		6P
Opening with latch	O	41	46	52	67
Clearance with single hook	P	90	100	110	130
Height (from hook to sheave spindle)	H	440	475	702	850
Overall width	L	356	356	325	400
Handing eye diameter	D	32	42	51	60
Approx weight		80kg	100kg	220kg	500kg
Ref GM		**G971M**	**G972M**	**G973M**	**G990M**

Other ball on request

Double sheaves snatch block

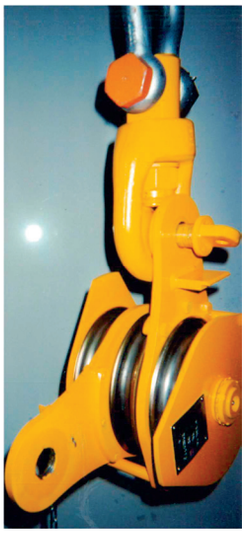

Triple sheaves snatch block

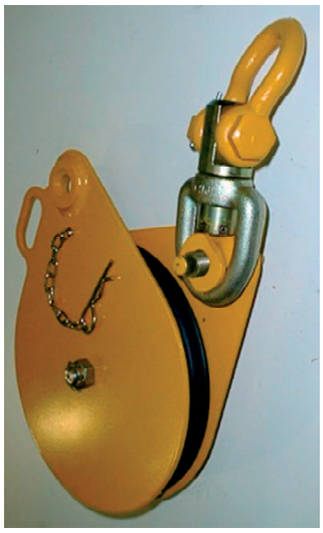

Single sheave snatch block with polyamide sheave

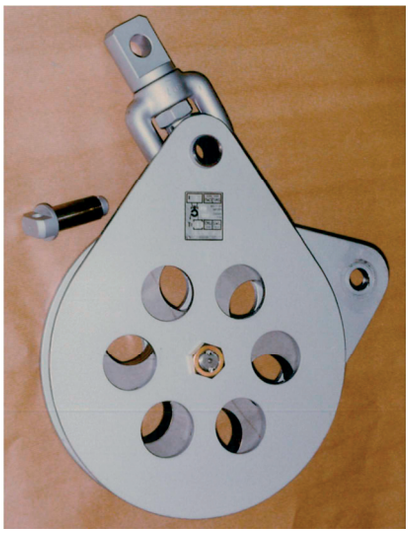

Stainless steel snatch block

Single sheave snatch block with polyamide on side plates

Hauling blocks

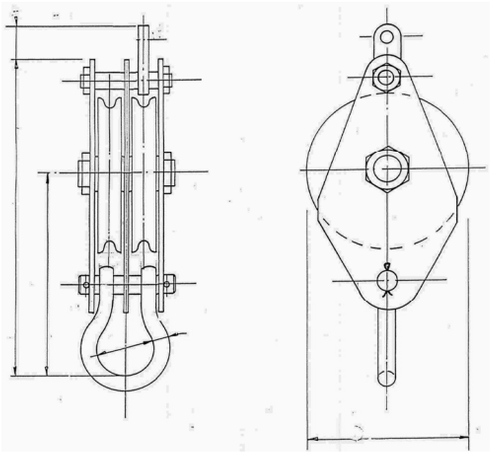

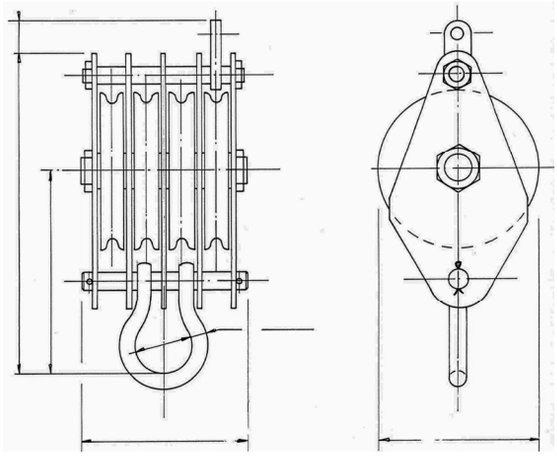

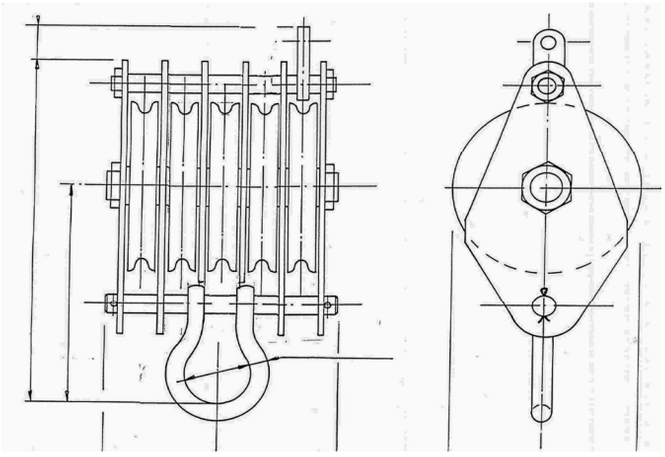

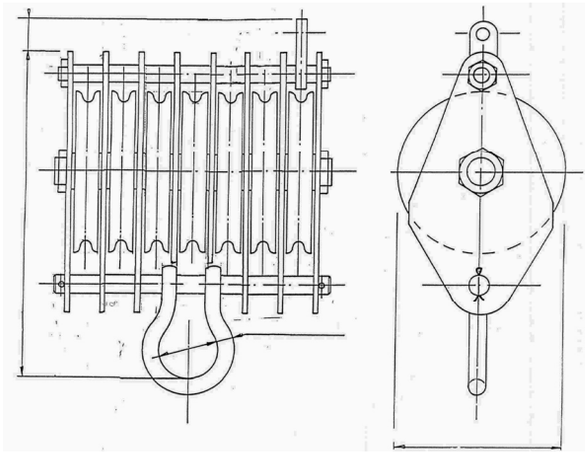

- Multi sheaves blocks
- Purpose = pulling only.
- Can be used with a Tirfor machine
- Designed with a becket for rope anchorage.
- Safety factor 2.5

	Outside Ø of sheave	Nb of sheave	Wire rope Ø	WLL (t)	Weight
F403Y	262	3	16.3	20	55
F404Y	262	4	16.3	25/30	60
F405Y	262	5	16.3	35	70
F406Y	262	6	16.3	40	80
F407Y	262	7	16.3	45	90

Other capacities on request

Single or multi sheaves snatch blocks - from 1 to 250 tons

Single sheave snatch block

WLL (t)	Wire rope Ø	Outside sheave Ø
35	32-38	500
50	38-42	605
85	44-48	750
100	50-55	860
150	60-70	910
200	75-85	1060
250	88-93	1170

Swivels

- The CF range swivels are designed to swivel under load and they are equipped with tapered roller thrust ball bearings.
- All hooks are DIN and completed with assembled latches
- All jaws are equipped with bolts, nuts and cotter pins
- Pressure lube fitting provided.
- Ultimate load is 5 times the Working Load Limit

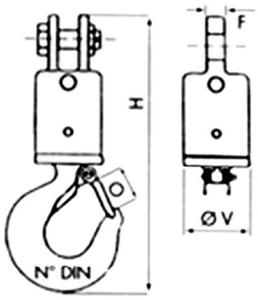

JAW or EYE / HOOK

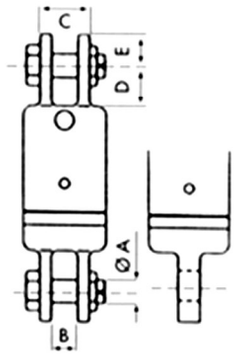

JAW / JAW or EYE

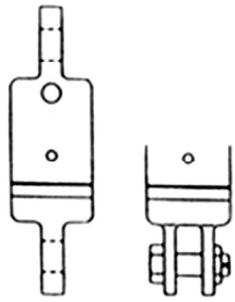

EYE / EYE or JAW

Swivel Jaw/hook : 25t
Swivel eye/eye : 15t

Other dimensions and capacities on request

Dimensions (mm)	SWL (t)							
	10	15	25	35	45	60	75	100
Ø A	38	38	51	51	57	65	77	102
B	45	45	51	51	58	70	80	95
C	86	86	117	117	127	152	178	205
D	89	89	94	94	102	114	127	171
E	45	45	61	61	76	76	89	103
F	43	50	57	57	64	89	89	114
G	410	430	550	550	66	710	813	1115
H	500	560	690	770	900	1010	1145	1398
Ø K	43	52	59	59	65	65	77	103
L	70	70	99	99	102	114	127	171
M	48	54	61	61	76	88	102	139
O	49	55	69	84	97	110	132	137
Ø V	114	127	152	165	178	178	204	254
Hook N° to DIN	4V	5V	8V	12V	16V	20V	25V	32V

Type	References							
Jaw / Hook	C110F	C115F	C125F	C135F	C145F	C160F	C175F	C100F
Eye / Hook	C210F	C215F	C225F	C235F	C245F	C260F	C275F	C200F
Jaw / Jaw	C310F	C315F	C325F	C335F	C345F	C360F	C375F	C300F
Jaw /Eye	C410F	C415F	C425F	C435F	C445F	C460F	C475F	C400F
Eye / Eye	C510F	C515F	C525F	C535F	C545F	C560F	C575F	C500F
Eye / Jaw	C610F	C615F	C625F	C635F	C645F	C660F	C675F	C600F

OFF-SHORE

Wire rope Fairleads

A large range of single or double sheave fairleads

- Extra heavy construction, built to withstand breaking strength of indicated rope at 90°
- Wearing guide plates or rollers to prevent chaffing, even under rapid, severe changes of wire rope lead
- Built to withstand at 120° breaking strength of indicated rope at 90° without deformation

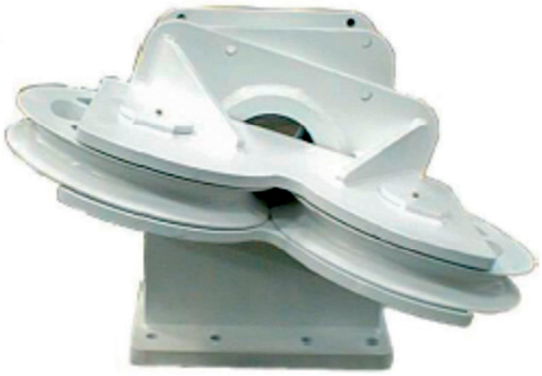

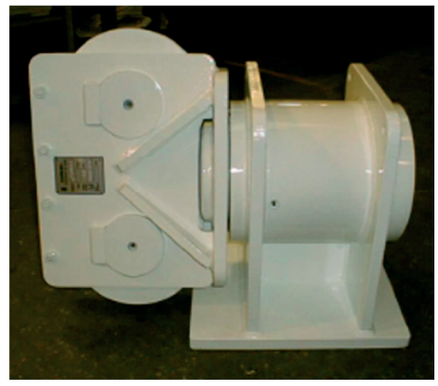

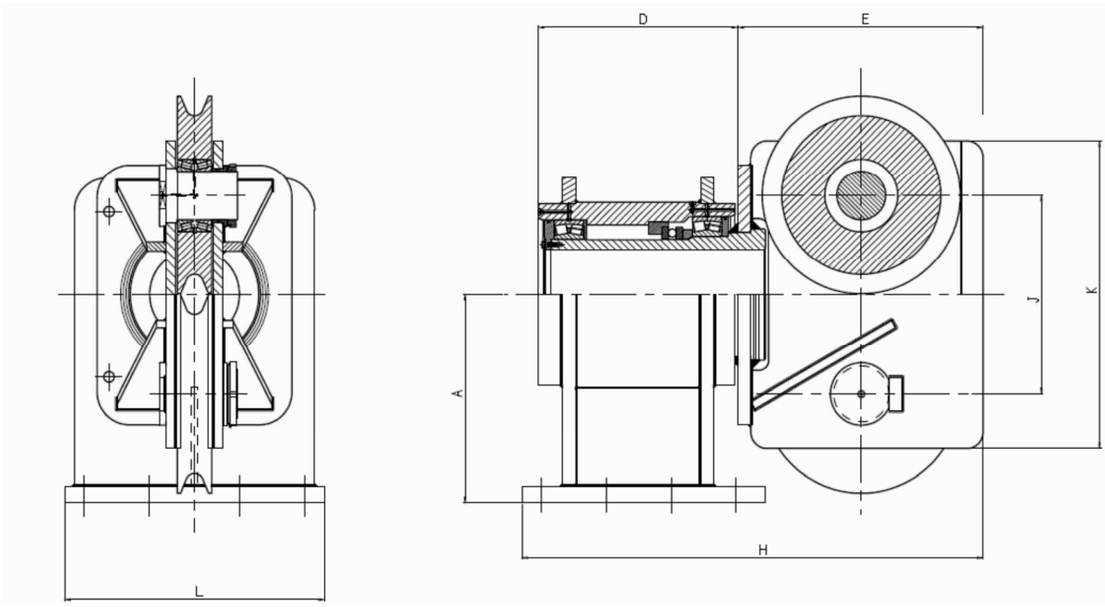

Model with 2 sheaves	F226D	F232D	F238D	F245D	F252D
Model with 1 sheave	F126D	F132D	F138D	F145D	F152D
Br Load (t)	43.5	65.9	92.9	131	167
Wire rope Ø (mm)	26	32	38	45	52
Sheave Ext Ø (mm)	254	305	406	508	610
Sheave BOG Ø (mm)	190	230	315	400	490
A	273	324	432	533	640
D	312	370	443	582	615
E	335	405	530	650	755
F	172	203	273	324	375
H	672	805	1025	1282	1420
J	258	308	410	512	612
K	440	510	650	800	950
L	360	440	520	680	800
Weight (kg)	300	440	750	1500	1950

Vertical deck sheave

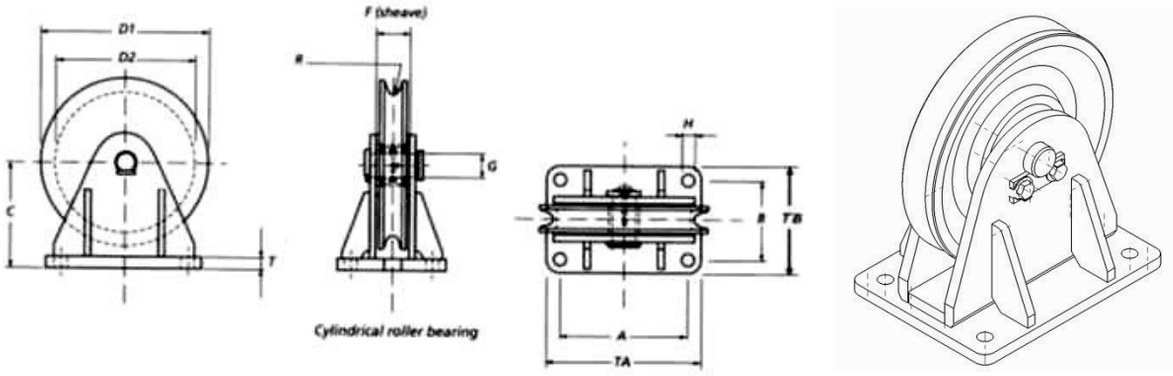

Type	WLL (t)	Wire rope Ø	Bearing	Dimensions (mm)												Weight (kg)
				D1	D2	A	B	C	F	G	H	T	R	TA	TB	
PV1	1	10	Ball	125	105	90	70	83	27	22	9	8	5.5	115	95	3
PV2	2	12	Ball	150	120	115	85	95	40	30	11	10	6.5	140	110	5
PV3	3	14	Ball	200	165	150	95	122	40	30	13.5	12	7.5	180	125	8
PV4	4	18	Roller	250	210	190	120	155	45	35	17.5	15	9.5	230	160	17
PV6	6	20	Roller	300	255	220	150	185	50	40	22	20	11	270	200	26
PV8	8	22	Roller	350	305	270	160	220	50	45	26	25	12	330	220	41
PV10	10	24	Roller	400	345	300	190	255	60	50	32	30	13	370	260	64

Horizontal deck sheave

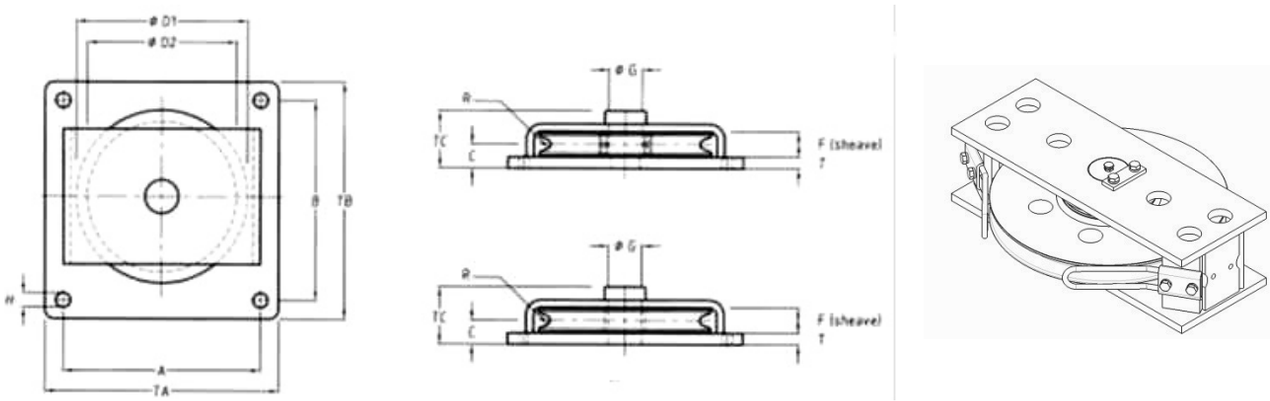

Type	WLL (t)	Wire rope Ø	Bearing	Dimensions (mm)													Weight (kg)
				ØD1	ØD2	A	B	C	F	ØG	H	T	R	TA	TB	TC	
PH1	1	10	Ball	125	105	180	150	22.5	27	22	9	8	5.5	200	170	54	5
PH2	2	12	Ball	150	120	220	190	31	40	30	11	10	6.5	250	220	72	10
PH3	3	14	Roller	200	165	290	240	33	40	30	13.5	12	7.5	320	270	76	17
PH4	4	18	Roller	250	210	360	310	38.5	45	35	17.5	15	9.5	400	350	86	32
PH6	6	20	Roller	300	255	400	360	46	50	40	22	20	11	450	410	99	50
PH8	8	22	Roller	350	305	460	420	46	50	45	26	20	12	520	480	99	70
PH10	10	24	Roller	400	345	530	480	51	60	50	32	20	13	600	550	113	100

Other capacities on request

These deck sheaves are painted in blue

OFF-SHORE

Multi angle Fairleads

2 Vertical Rollers

2 Horizontal Rollers

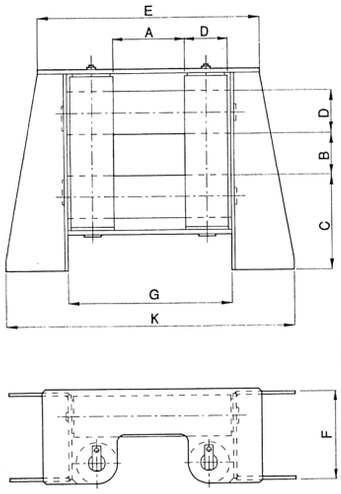

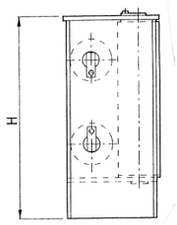

Type	SWL	Rope Ø	A	B	C	D	E	F	G	H	K
BA100	4	16	200	100	310	100	580	210	420	575	830
BA120	6	20	230	130	335	120	650	250	490	650	920
BA140	8	24	250	150	360	140	750	290	550	725	1030
BA160	12	28	250	150	385	160	810	335	590	775	1150
BA180	16	32	300	180	410	180	920	370	680	860	1220
BA200	20	36	300	200	450	200	1000	415	730	950	1310
BA250	30	44	320	200	505	250	1140	515	850	1060	1430

Miscellaneous blocks and sheaves

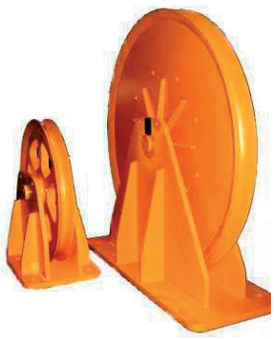

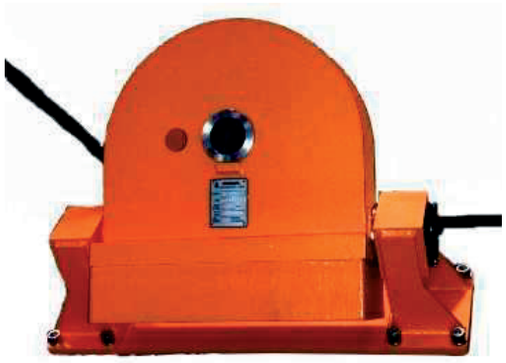

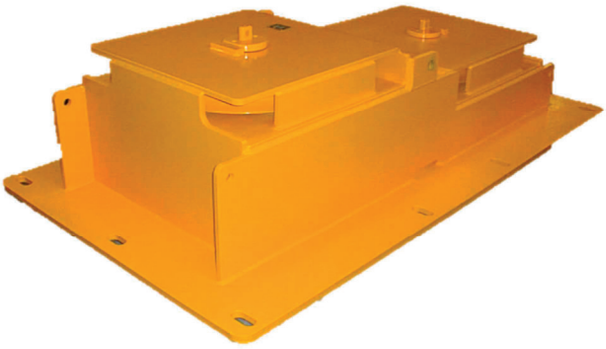

SHEAVES

Tractel Solutions offers a wide range of custom made sheaves

Pitch diameter (Ødp) = Wire rope Ø x R

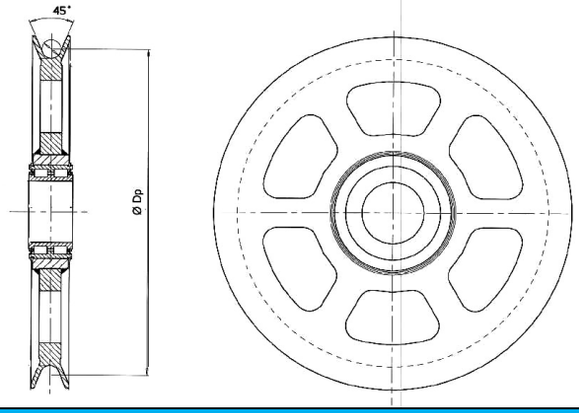

DETERMINATION OF A SHEAVE ACCORDING TO THE FEM RULES DATED 1987								
FEM Rules dated 1970	1Dm	1Cm	1Bm	1Am	2m	3m	4m	5m
FEM Rules dated 1987	M1	M2	M3	M4	M5	M6	M7	M8
Minimum Winding Ratio of sheave (R)	12	14	16	18	20	22.4	25	28

CSB – Sheaves with ball bearings

- Electrogalvanized
- 6200-2RS series bearings
- Other dimensions available upon request
- Other materials available upon request

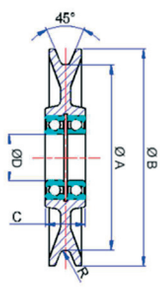

	Group Code	ØB/ ØA sheave (mm)	Cable Ø (mm)	C	D	Bearings	WLL (t)	Weight (kg)
CSB012	104359	133/150	6-7	32	25	6205-2RS	1,6	1,75
CSB014	105639	125/150	7,5-8					
CSB022	104389	152/175	7-8	34	30	6206-2RS	2	2,7
CSB024	105649	150/178	9-10					
CSB032	104419	172/200	8-9	36.5	35	6207-2RS	2,5	4,1
CSB034	105659	165/200	10-11					
CSB042	104449	180/210	9-10	38.5	40	6208-2RS	3,2	5,1
CSB044	105669	180/210	11-12					
CSB052	104479	200/235	10-11	43	50	6210-2RS	4	6,9
CSB054	105679	195/235	12-13					
CSB062	104509	228/270	11-12	48	60	6212-2RS	6.3	10,2
CSB064	105689	225/270	13-14					
CSB072	104539	257/297	12-13	48	60			12,3
CSB074	105699	257/297	14-15					
CSB082	104569	280/330	13-14	56	80	6216-2RS	10	23,1
CSB084	105709	280/330	15-16					
CSB092	104599	320/375	15-16	56	80			24,5
CSB094	105719	306/370	17-18					
CSB102	104629	355/425	17-18	64	90	6218-2RS	12,5	34
CSB104	105729	355/425	19-20					
CSB112	104659	400/470	19-20	72	100	6220-2RS	16	45
CSB114	105739	400/470	22-24					
CSB122	105759	440/510	20-22	80	110	6222-2RS	20	65
CSB124	105779	430/510	24-26					
CSB132	105799	500/570	22-24	85	120	6224-2Z		115
CSB142	105829	550/630	24-26		130	6226-2Z	25	140

Bespoke dimensions on request

CBB – Welded sheaves with ball bearings

- Painted in RAL 1004
- 6200-2RS series bearings
- Made of steel S355J2
- Groove hardness up to 330HB on request
- Other dimensions available upon request

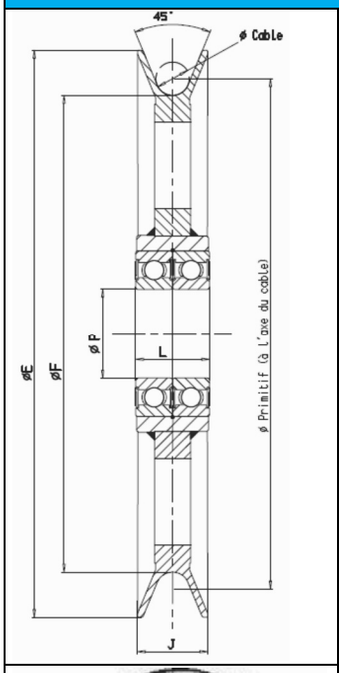

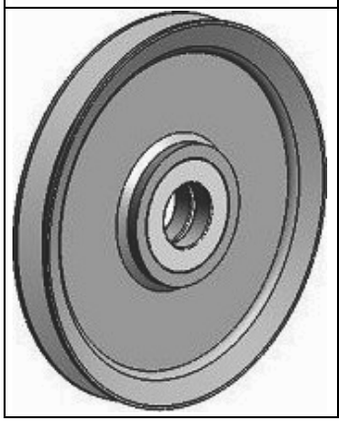

	Cable / Rope Ø (mm)	F (mm)	R (mm)	E (mm)	J (mm)	P (mm)	L (mm)	Ball bearing
CBB100	10	280	5.3	315	33	55	42	6211 ZZ
CBB110	11		6	320	38			
CBB120	12		6.5					
CBB130	13		7	325	40			
CBB140	14		7.5	330	45			
CBB141	14	315	7.5	365		70	48	6214 ZZ
CBB160	16		8.5	370	50			
CBB142	14	355	7.5	405	45	85	56	6217 ZZ
CBB161	16		8.5	410	50			
CBB180	18		9	415	53			
CBB190	19		10	420	55			
CBB143	14	400	7.5	450	45	100	68	6220 ZZ
CBB162	16		8.5	455	50			
CBB191	19		10	465	55			
CBB200	20		11		56			
CBB220	22		12	470	61			
CBB163	16	450	8.5	505	50	120	56	6024 ZZ
CBB192	19		10	515	55			
CBB201	20		11		56			
CBB221	22		12	520	61			
CBB240	24		13		62			
CBB193	19	500	10	565	55	120	80	6224 ZZ
CBB202	20		11		56			
CBB222	22		12	570	61			
CBB241	24		13		62			
CBB260	26		14	580	66			

Bespoke dimensions on request

CBR – Cold formed laminated steel sheave with cylindrical roller bearing

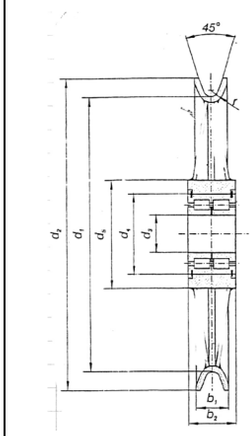

	Cable Ø (mm)	d1 (mm)	R (mm)	d2 (mm)	b1 (mm)	d3 (mm)	b2 (mm)	d4 (mm) M7	d5 (mm)	Ring (mm)	Bearing type SL 04 PPX
CBR001	14	400	7.5	450	45	100	67	150	194	150	5020
CBR002	16		8.5	455	50						
CBR003	18		10	465	55						
CBR004	20		11	465	56						
CBR005	22		12	470	61						
CBR006	16	450	8.5	505	50	110	80	170	219	170	5022
CBR007	18		10	515	55						
CBR008	20		11	515	56						
CBR009	22		12	520	61						
CBR010	24		13	520	62						
CBR011	19	500	10	565	55	120		180	245	180	5024
CBR012	20		11	565	56						
CBR013	22		12	570	61						
CBR014	24		13	570	62						
CBR015	26		14	580	66						
CBR016	20	560	11	625	56	130	95	200	273	200	5026
CBR017	22		12	630	61						
CBR018	24		13	630	62						
CBR019	26		14	640	66						
CBR020	20	630	11	695	53	140		210		210	5028
CBR021	22		12	700	61						
CBR022	24		13	700	62						
CBR023	26		14	715	66						
CBR024	28		15	705	68						
CBR025	30		16	710	75						
CBR026	32		17	720	79						
CBR027	20	710	11	775	53	150	100	225	299	225	5030
CBR028	22		12	780	61						
CBR029	24		13	780	62						
CBR030	26		14	785	66						
CBR031	28		15	785	68						
CBR032	30		16	790	75						
CBR033	32		17	800	79						
CBR034	24	800	13	870	62	160	109	240		240	5032
CBR035	26		14	875	66						
CBR036	28		15	875	68						
CBR037	30		16	880	75						
CBR038	32		17	890	79						
CBR039	36		19.5	910	89						
CBR040	26	900	14	975	66	170	122	260	324	260	5034
CBR041	28		15	975	68						
CBR042	30		16	980	75						
CBR043	32		17	990	79						
CBR044	36		19.5	1010	89						
CBR045	40		21.5	1015	98						
CBR046	30	1000	16	1080	75	180	136	280		280	5036
CBR047	32		17	1090	79						
CBR048	36		19.5	1110	89						
CBR049	40		21.5	1115	98						
CBR050	43		23	11125	104						
CBR051	47		25	1130	110						
CBR052	36	1120	19.5	1230	89	200	150	310	380	310	5040
CBR053	40		21.5	1235	98						
CBR054	43		23	1245	104						
CBR055	47		25	1250	110						
CBR056	40	1250	21.5	1365	98	220	160	340	406	340	5044

On request: Groove hardness at 300-350HB (steel S355K2G0) / Groove hardness at 450HB (steel 42CrNiMo4) / Other dimensions

CBR – Cold formed laminated steel sheave with ball bearings, seals, covers and sleeve

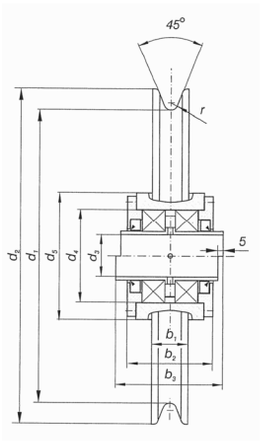

	Cable Ø (mm)	d1 (mm)	R (mm)	d2 (mm)	b1 (mm)	d3 (mm)	b2 (mm)	d4 (mm) M7	d5 (mm)	Ball bearing
CBR101	14	400	7.5	450	45	75	107	160	219	6218
CBR102	16		8.5	455	50					
CBR103	18		10	465	55					
CBR104	20		11	465	56					
CBR105	22		12	470	61					
CBR106	16	450	8.5	505	50	100	127	215	273	6224
CBR107	18		10	515	55					
CBR108	20		11	515	56					
CBR109	22		12	520	61					
CBR110	24		13	520	62					
CBR111	19	500	10	565	55	120	131	250	324	6228
CBR112	20		11	565	56					
CBR113	22		12	570	61					
CBR114	24		13	570	62					
CBR115	26		14	580	66					
CBR116	20	560	11	625	56	140	146	290	356	6232
CBR117	22		12	630	61					
CBR118	24		13	630	62					
CBR119	26		14	640	66					
CBR120	20	630	11	695	53	150	131	260	324	6034
CBR121	22		12	700	61					
CBR122	24		13	700	62					
CBR123	26		14	715	66					
CBR124	28		15	705	68					
CBR125	30		16	710	75					
CBR126	32		17	720	79					
CBR127	20	710	11	775	53	170	141	290	356	6038
CBR128	22		12	780	61					
CBR129	24		13	780	62					
CBR130	26		14	785	66					
CBR131	28		15	785	68					
CBR132	30		16	790	75					
CBR133	32		17	800	79					
CBR134	24	800	13	870	62	180	151	310	390	6040
CBR135	26		14	875	66					
CBR136	28		15	875	68					
CBR137	30		16	880	75					
CBR138	32		17	890	79					
CBR139	36		19.5	910	89					
CBR140	26	900	14	975	66	200	161	340	406	6044
CBR141	28		15	975	68					
CBR142	30		16	980	75					
CBR143	32		17	990	79					
CBR144	36		19.5	1010	89					
CBR145	40		21.5	1015	98					
CBR146	30	1000	16	1080	75	220	161	360	420	6048
CBR147	32		17	1090	79					
CBR148	36		19.5	1110	89					
CBR149	40		21.5	1115	98					
CBR150	43		23	11125	104					
CBR151	47		25	1130	110					
CBR152	36	1120	19.5	1230	89	240	193	400	508	6052
CBR153	40		21.5	1235	98					
CBR154	43		23	1245	104					
CBR155	47		25	1250	110					
CBR156	40	1250	21.5	1365	98	260	193	420	508	6056

On request: Groove hardness at 300-350HB (steel S355K2G0) / Groove hardness at 450HB (steel 42CrNiMo4) / Other dimensions

Hooks with non-machined shank

Class	Strength (kg/mm²)	DIN	AFNOR
(M)	40	AST 41	XC18
P	**50**	**AST 52**	**E36.4/20M5**
(S)	63	34CrMo4	34CD4
T	80	34CrMo4	34CD4
V	**100**	**34CrNiMo6**	**35NCD6**

DIN 15401

DIN 15402

Strength Class	Drive group									
(M)			M1 (1Dm)	M2 (1Cm)	M3 (1Bm)	M4 (1Am)	M5 (2m)	M6 (3m)	M7 (4m)	M8 (5m)
P		M1 (1Dm)	M2 (1Cm)	M3 (1Bm)	M4 (1Am)	M5 (2m)	M6 (3m)	M7 (4m)	M8 (5m)	
(S)	M1 (1Dm)	M2 (1Cm)	M3 (1Bm)	M4 (1Am)	M5 (2m)	M6 (3m)	M7 (4m)	M8 (5m)		
T	M2 (1Cm)	M3 (1Bm)	M4 (1Am)	M5 (2m)	M6 (3m)	M7 (4m)	M8 (5m)			
V	M3 (1Bm)	M4 (1Am)	M5 (2m)	M6 (3m)	M7 (4m)	M8 (5m)				
Hook #	**Lifting capacity**									
1	5	4	3.2	2.5	2	1.6	1.25	1	0.8	0.63
1.6	8	6.3	4	4	3.2	2.5	2	1.6	1.25	1
2.5	12.5	10	8	6.3	5	4	3.2	2.5	2	1.6
4	20	16	12.5	10	8	6.3	5	4	3.2	2.5
5	25	20	16	12.5	10	8	6.3	5	4	3.2
6	32	25	20	16	12.5	10	8	6.3	5	4
8	40	32	25	20	16	12.5	10	8	6.3	5
10	50	40	32	25	20	16	12.5	10	8	6.3
12	63	50	40	32	25	20	16	12.5	10	8
16	80	63	50	40	32	25	20	16	12.5	10
20	100	80	63	50	40	32	25	20	16	12.5
25	125	100	80	63	50	40	32	25	20	16
32	160	125	100	80	63	50	40	32	25	20
40	200	160	125	100	80	63	50	40	32	25
50	250	200	160	125	100	80	63	50	40	32
63	320	250	200	160	125	100	80	63	50	40
80	400	320	250	200	160	125	100	80	63	50
100	500	400	320	250	200	160	125	100	80	63
125	-	500	400	320	250	200	160	125	100	80
160	-	-	500	400	320	250	200	160	125	100
200	-	-	-	500	400	320	250	200	160	125
250	-	-	-	-	500	400	320	250	200	160

Note: these hooks exist in 2 models.

- RS: Forged in a mould
- RF: Free forged

If customer requires sample or proof test, a longer shank will be necessary

Hooks Dimensions

Single hook with non-machined shank according to DIN 15401

N° hook	a1	a2	a3	b1	b2	d1	e1	e2	e3	f1	h1	h2	l1	Weight (kg)
006	25	20	28	13	11	14	60	60	52	14.5	17	14	100	0.2
010	28	22	32	16	13	16	67	68	60	16.5	20	17	109	0.3
012	30	24	34	19	15	16	71	73	63	18	22	19	115	0.4
020	34	27	39	21	18	20	81	82	70	20	26	22	138	0.6
025	36	28	41	22	19	20	85	88	74	22	28	24	144	0.8
04	40	32	45	27	22	24	96	100	83	25	34	29	155	1.1
05	43	34	49	29	24	24	102	108	89	26	37	31	167	1.6
08	48	38	54	35	29	30	115	120	100	29	44	37	186	2.3
1	50	40	57	38	32	30	120	128	105	31	48	40	197	3.2
1.6	56	45	64	45	38	36	135	146	118	35	56	48	224	4.5
2.5	63	50	72	53	45	42	152	167	132	40	67	58	253	6.3
4	71	56	80	63	53	48	172	190	148	45	80	67	285	8.8
5	80	63	90	71	60	53	194	215	165	51	90	75	318	12.3
6	90	71	101	80	67	60	218	240	185	57	100	85	380	17.1
8	100	80	113	90	75	67	242	268	210	64	112	95	418	24
10	112	90	127	100	85	75	256	286	221	-	125	106	452	40
12	125	100	143	112	95	85	292	316	252	-	140	118	510	55
16	140	112	160	125	106	95	325	357	280	-	160	132	582	77
20	160	125	180	140	118	106	370	405	330	-	180	150	653	112
25	180	140	202	160	132	118	415	455	360	-	200	170	724	160
32	200	160	225	180	150	132	465	510	400	-	224	190	796	220
40	224	180	252	200	170	150	517	567	447	-	250	212	893	310

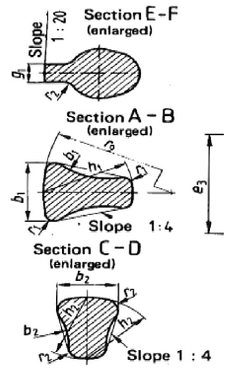

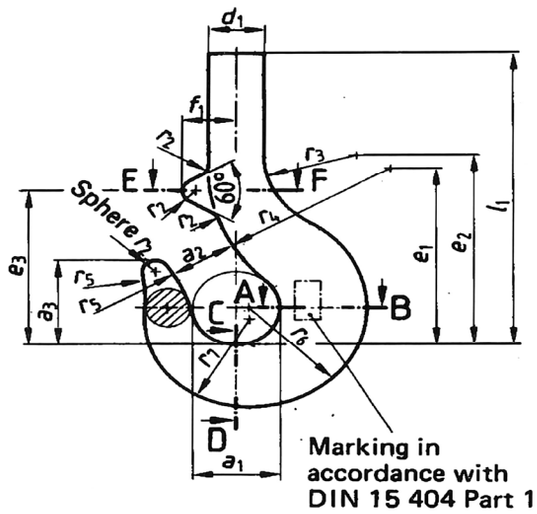

Double hook with non-machined shank according to DIN 15402

N° hook	a1	a2	a3	b1	d1	f1	h	l1	r1	r2	r3	Weight (kg)
05	34	27	44	22	24	130	27	165	3	3	36	1.9
08	28	30	49	26	30	150	33	183	4	3	41	2.6
1	40	32	52	28	30	158	36	195	4	3.5	44	3.8
1.6	45	36	59	34	36	183	43	222	5	4	51	5.3
2.5	50	40	65	40	42	208	50	250	6	4.5	58	6.9
4	56	45	73	48	48	238	60	280	7	5.5	67	9.7
5	63	50	82	53	53	266	67	312	8	6.5	75	13.4
6	71	56	92	60	60	301	75	375	9	7	85	16.8
8	80	63	103	67	67	337	85	415	10	8	95	25.3
10	90	71	116	75	75	377	95	450	11	9	106	35.5
12	100	80	130	85	85	421	106	510	12.5	10	118	49.5
16	112	90	146	95	95	471	118	580	14	11	132	69.7
20	125	100	163	106	106	531	132	650	16	12.5	150	97.5
25	140	112	182	118	118	598	150	715	18	14	170	135
32	160	125	205	132	132	672	170	790	20	16	190	193
40	180	140	230	150	150	754	190	885	22	18	212	280

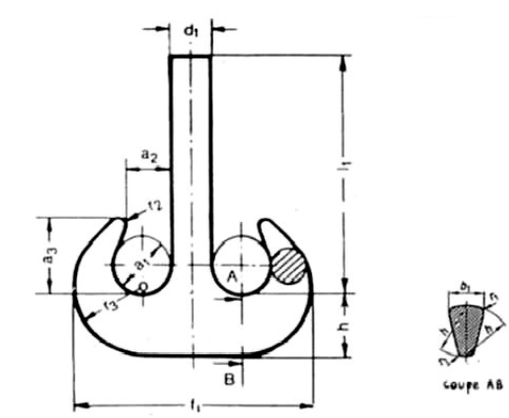

CS: Single hooks according to DIN 15401

High quality range of CHARLET hooks.
Designed and shaped in accordance with DIN15401 and 15402.
Systematically inspected.
Samples on request.
The shanks of the hooks are machined in accordance with customer's standards and specification: half round thread in accordance with ATS or with DIN.

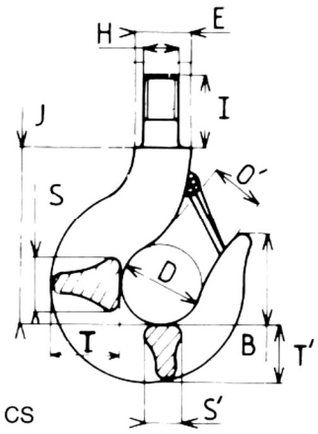

SWL steel class P M4 SWL steel class V M4		10t 16/20t	- 25t	16t 32t	20t 40t	25t 50t	32t 63t	40t 80t	50t 100t	63t 125t	80t -	100t -
General Specifications												
Hook #		5	6	8	10	12	16	20	25	32	40	50
Beak height	B	90	101	113	127	143	160	180	202	225	252	285
Seat Ø	D	80	90	100	112	125	140	160	180	200	224	250
Opening without/with latch	O'	63/55	71/60	80/70	90/75	100/83	112/87	125/90	140/115	160/135	180/150	200/170
Horizontal section thickness	S	61	80	90	100	112	125	140	160	180	200	224
Horizontal section height	T	95	100	112	125	140	160	180	200	224	250	280
Vertical section thickness	S'	52	67	75	85	95	106	118	132	150	170	190
Vertical section height	T'	75	85	95	106	118	132	150	170	190	212	236
Approx. weight, machined (kg)		12.5	20	29	42	60	85	120	175	250	365	530
With non-machined shank												
Non-machined shank Ø	E	60	60	67	75	85	95	106	118	132	150	170
Ref for steel class P Ref for steel class V		C322S C373S	- C374S	C328S C378S	C332S C382S	C336S C382S	C340S C390S	C344S C394S	C348S C398S	C352S C402S	C356S -	C360S -
With machined shank & bearing nut												
Machined shank Ø cl P	H	48	-	64	64	72	80	90	100	110	125	140
Machined shank Ø cl V	H	45	52	64	64	72	80	90	100	110	-	-
Machined shank length cl P	I	107	-	114	134	147	167	172	202	213	280	285
Machined shank length cl V	I	114/134	155	172	180	210	213	273	298	318	-	-
Height inside seat to shoulder cl P	J	211	-	266	286	313	363	408	468	518	580	650
Height inside seat to shoulder cl V	J	203/211	225	251	277	305	369	380	426	478	-	-
Ref for steel class P Ref for steel class V		C323S C377S	- C375S	C329S C379S	C333S C383S	C337S C387S	C341S C391S	C345S C395S	C349S C399S	C353S C403S	C357S -	C361S -

CD: Double hooks according to DIN 15402

High quality range of CHARLET hooks.
Designed and shaped in accordance with DIN15401 and 15402.
Systematically inspected.
Samples on request.
The shanks of the hooks are machined in accordance with customers standards and specification: half round thread in accordance with ATS or with DIN.

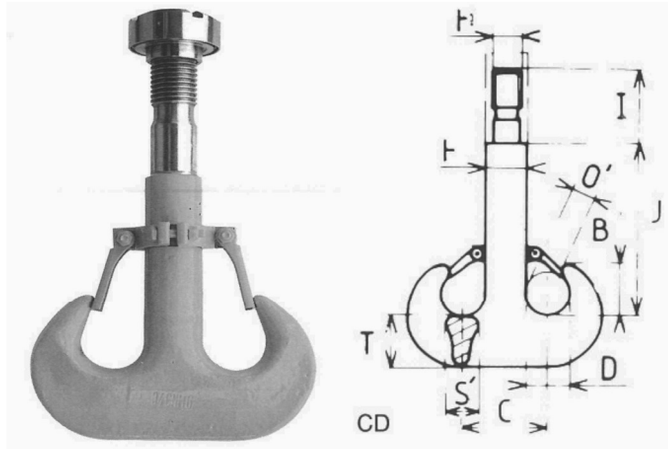

SWL steel class P M4 SWL steel class V M4		6.3/8t -	10t 16/20t	- 25t	16t 32t	20t 40t	25t 50t	32t 63t	40t 80t	50t 100t	63t 125t	80t -	100t -
General Specifications													
Hook #		4	5	6	8	10	12	16	20	25	32	40	50
Beak height	B	73	82	92	103	116	130	146	163	182	205	230	260
Seat Ø	D	56	63	71	80	90	100	112	125	140	160	180	200
Axis to axis of 2 seats	C	104	116	131	147	165	185	207	231	258	292	330	370
Opening without/with latch	O'	45/35	50/45	56/44	63/51	71/55	80/65	90/76	100/86	112/91	125/99	140/110	150/120
Vertical section thickness	S'	48	53	60	67	75	85	95	106	118	132	150	170
Vertical section height	T'	60	67	75	85	95	106	118	132	150	170	190	212
Approx. weight, machined (kg)		8	11	16	24	33	43	62	82	115	160	218	300
With non-machined shank													
Non-machined shank Ø	E	48	53	60	67	75	85	95	106	118	132	150	170
Ref for steel class P Ref for steel class V		C426D -	C430D C480D	- C484D	C438D C488D	C442D C492D	C446D C496D	C450D C500D	C454D C504D	C458D C508D	C462D C512D	C466D -	C470D -
With machined shank and nut													
Machined shank Ø cl P	H	42	48	-	64	64	72	80	90	100	110	125	140
Machined shank Ø cl V	H	-	45	52	64	64	72	80	90	100	110	-	-
Machined shank length cl P	I	87.5	107	-	115	135	147	167	175	205	213	260	274
Machined shank length cl V	I	-	114/134	155	172	180	210	213	273	298	318	-	-
Height inside seat to shoulder cl P	J	157	173	-	220	243	273	306	341	388	433	485	545
Height inside seat to shoulder cl V	J	-	170	188	210	220	283	303	320	350	413	-	-
Ref for steel class P Ref for steel class V		C427D -	C431D C481D	- C485D	C439D C489D	C443D C493D	C447D C497D	C451D C501D	C455D C505D	C459D C509D	C463D C513D	C467D -	C471D -

CZ: Suspension system with thrust ball bearing crosshead

The CHARLET CZ range covers a wide range of suspension system and lifting applications including spreader bars, designed for use in building, public works, nuclear and offshore industries.

Especially designed for easy maintenance on your equipment.

The thrust crosshead is engineered in accordance with high standards for the maximum efficiency.

The thrust bearing is protected by a side plate and equipped with a lubricator.

CHARLET proposes standard type of crosshead.

On request:

- Configuration to DIN 15411
- Larger hook number up to number 250
- Double hook with hole to DIN 15402B

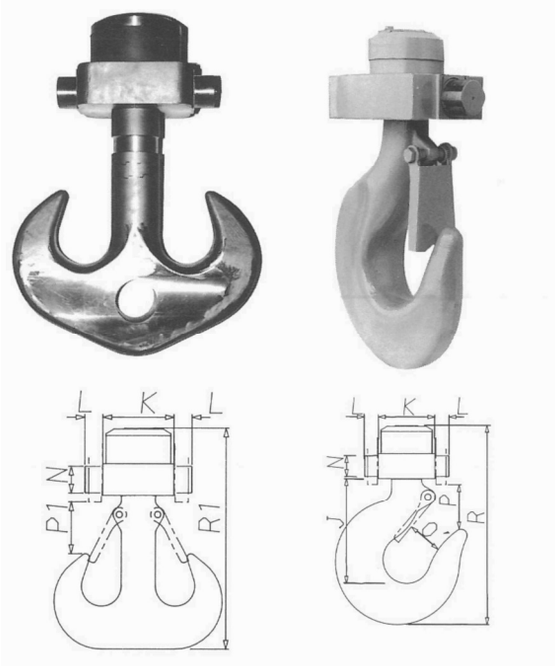

Lifting SWL M4		4t	6.3t	10t	16t	20t	25t	32t	40t	50t	63t	80t	100t
General Specifications													
Crosshead length mini (Cl P)	K	75	95	113	152	152	188	188	205	223	250	286	350
Crosshead length mini (Cl V)	K	-	-	-	152	152	188	188	205	223	250	-	-
Trunnion length	L	19	23	28	34	34	34	40	40	45	45	56	56
Trunnion diameter	N	27	33	42	50	55	65	80	80	100	100	125	125
Hook # (Cl P)		A26P	4	5	8	10	12	16	20	25	32	40	50
Hook # (Cl V)		-	-	-	4	5	6	8	10	12	16	-	-
With single hook													
Clearance with single hook (Cl P)	P	60	73	75	128	145	160	180	208	228	255	283	320
Clearance with single hook (Cl V)	P	-	-	-	97	97	110	110	120	147	160	-	-
Total height (Cl P)	R	255	347	385	475	526	578	662	730	840	920	1052	1160
Total height (Cl V)	R	-	-	-	392	420	465	518	563	633	714	-	-
Weight with single hook (Cl P)		5.4kg	9.3kg	17kg	39kg	59kg	77kg	115kg	150kg	233kg	310kg	420kg	550kg
Weight with single hook (Cl V)		-	-	-	25kg	25kg	38kg	61kg	74kg	121kg	147kg	-	-
Ref Single hook steel Cl P		C530Z	C532Z	C537Z	C536Z	C538Z	C540Z	C542Z	C544Z	C546Z	C548Z	C550Z	C552Z
Ref Single hook steel Cl V		-	-	-	C566Z	C568Z	C570Z	C572Z	C574Z	C576Z	C578Z	-	-
With double hook													
Clearance with double hook (Cl P)	P1	-	75	75	98	106	122	134	152	168	190	210	240
Clearance with double hook (Cl V)	P1	-	-	-	80	80	90	90	90	130	130	-	-
Total height (Cl P)	R1	-	305	344	420	473	526	591	648	743	816	935	1031
Total height (Cl V)	R1	-	-	-	351	371	418	467	495	599	634	-	-
Weight with double hook (Cl P)		-	15kg	17.5kg	34kg	50kg	60kg	92kg	112kg	173kg	220kg	285kg	370kg
Weight with double hook (Cl V)		-	-	-	21kg	21kg	45kg	75kg	85kg	145kg	165kg	-	-
Ref double hook steel Cl P		-	C592Z	C594Z	C596Z	C598Z	C600Z	C602Z	C604Z	C606Z	C608Z	C610Z	C612Z
Ref double hook steel Cl V		-	-	-	C626Z	C628Z	C630Z	C632Z	C634Z	C636Z	C638Z	-	-

Suspension fittings: device for rotation locking

Type A : 4 positions at 90°	Type B :Built-in rotation locking	Type C :Rotation locking with double plug bolts
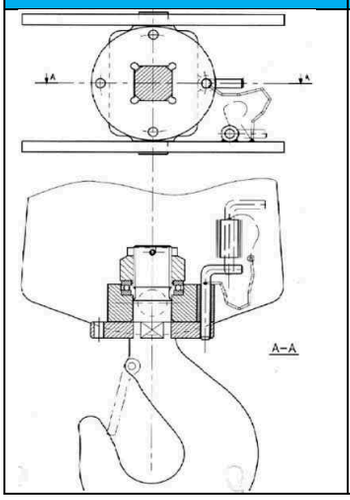	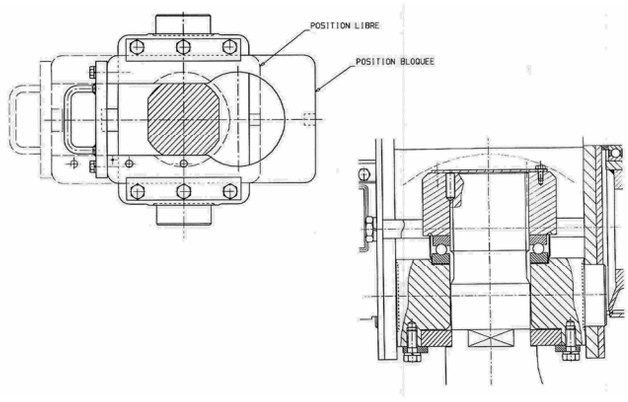	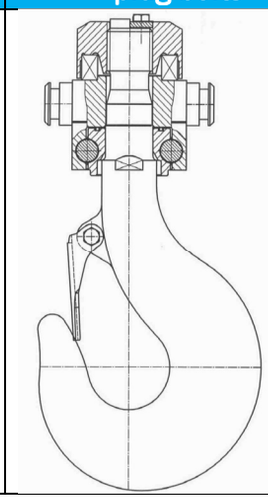

Safety Latchs

Regular safety latch	Safety latch with handle
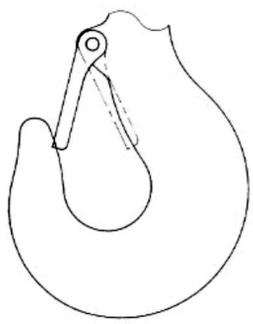	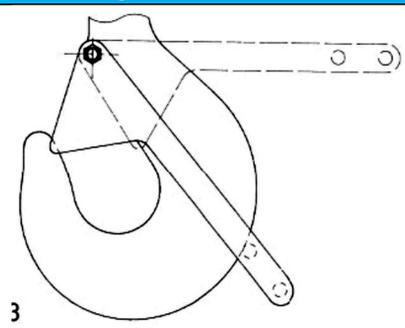
Safety latch with automatic configuration	**Automatic Hook**
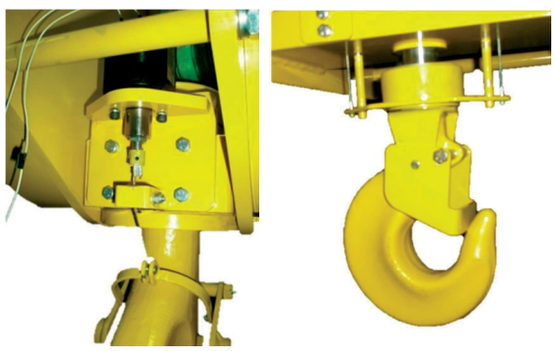	

Laminated point hooks

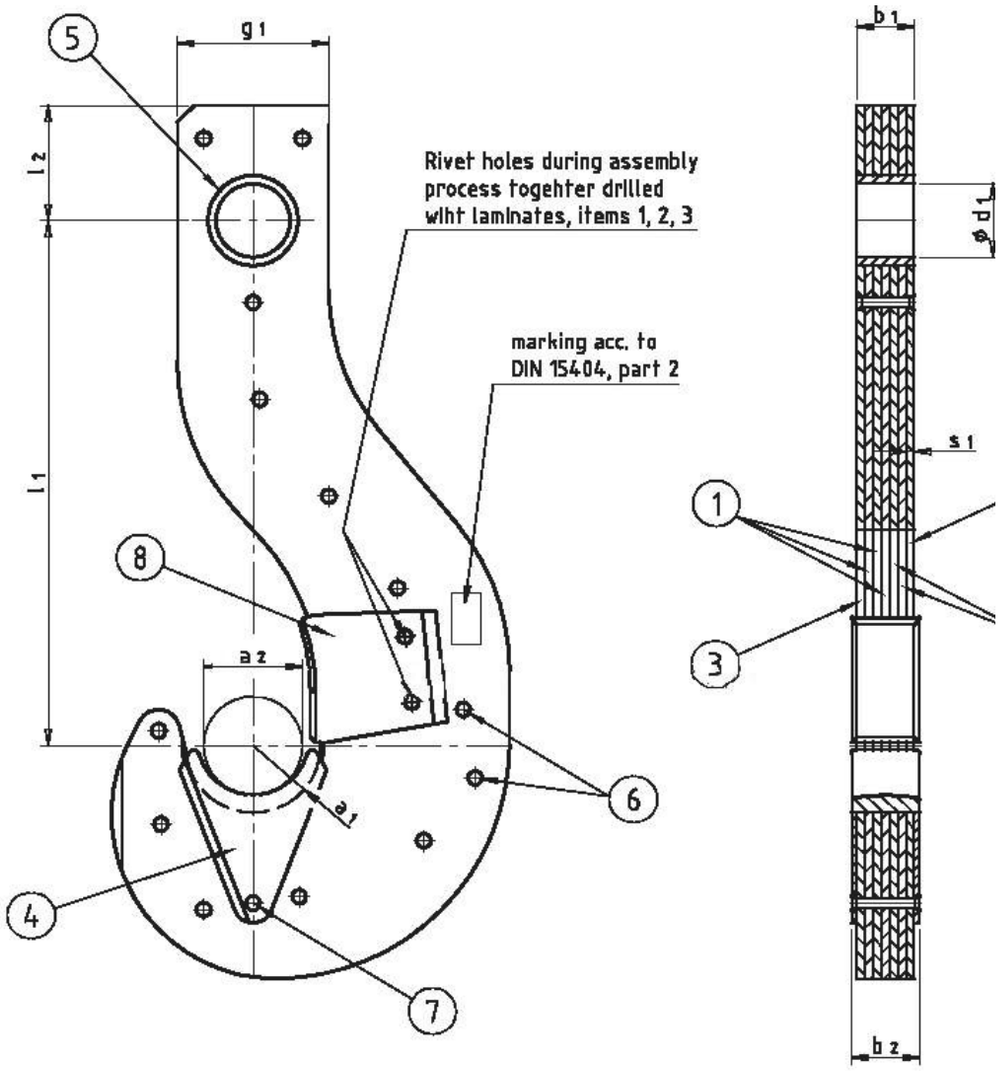

Load capacity (to) laminated hooks	A1	A2	B1	B2	D1	G1	L1	L2	S1	Number of pieces for item 1	Load capacity of related ladle crances (to)
16	110	130	64	96	100	220	1000	170	16	2	32
20		145	64	96						2	40
25		160	80	112						3	50
25	130	160	64	96	125	280	1120	200	16	2	50
32		180	80	112						3	63
40		200	112	144						5	80
40	150	200	80	112	160	340	1250	250	20	2	80
50		225	100	132						3	100
63		225	140	172						5	125
63	170	225	125	157	180	380	1400	300	25	3	125
80		250	150	182						4	160
100		250	175	207						5	200
100	205	250	175	207	225	460	1600	350	25	5	200
125		280	200	232						6	250
160		320	250	282						8	320
160	250	320	225	265	250	550	1800	420	25	7	320
200		360	275	315						9	400
250		400	325	365						11	500
250	300	400	315	355	290	620	2000	470	35	7	500
320		500	385	425						9	630

COIL MANUTENTION

C-hooks

From 5000 up to 32 000 kg – All measures in mm
For other capacities, please consult us

Ref	WLL (tons)	A	B	D	C	V	W	Weight (kg)
SCT5 700 600	5	700	600	136	50	165	100	350
SCT7,5 800 700	7,5	800	700	165	60	170	115	515
SCT10 1000 700	10	1000	700	195	70	180	150	745
SCT16 1200 700	16	1200	700	250	80	250	170	1230
SCT20 1500 900	20	1500	900	300	90	250	170	2050
SCT25 1600 900	25	1600	900	325	100	250	170	2605
SCT32 2000 900	32	2000	900	375	120	250	170	3850

Dimensions in mm

On request

- Adjustable suspension
- Secutex coating
- Handle
- Stabilisation feet
- Safety end peak

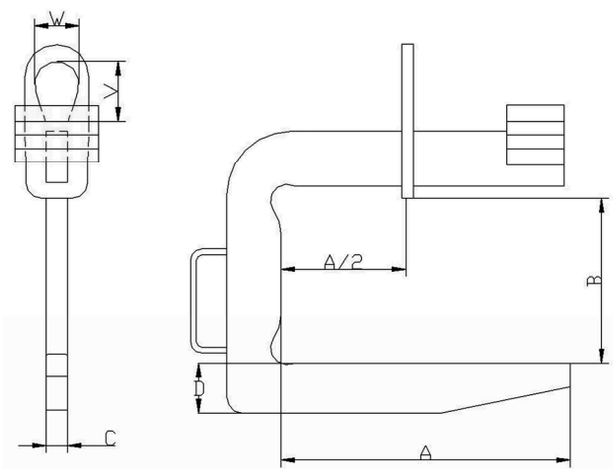

Telescopic coil grab

Head-fitting and length of gripping legs manufactured to suit your application

To comply with your specific quality and safety specifications, optional equipment is available on request

Bundles grab

COIL MANUTENTION

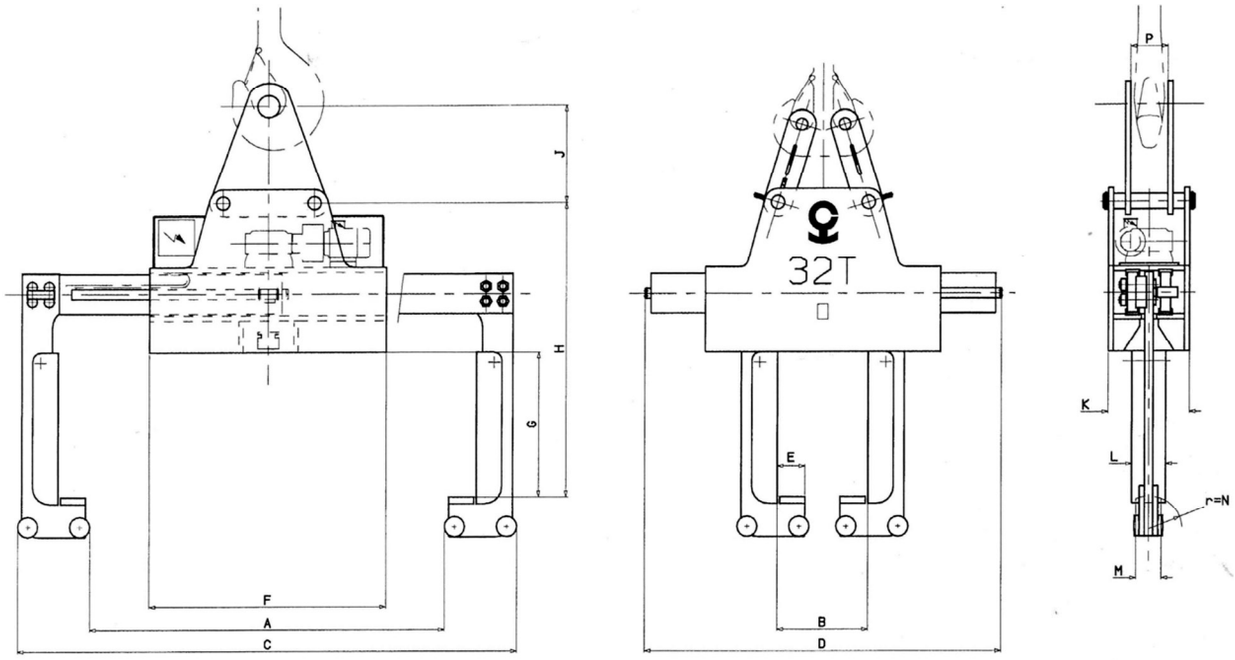

Type	M4	M6	M8	A	B	C	D	E	F	G	H	J CS / CD	K	L	M	N	P CS / CD	Weight (kg)
T010B	16t	12,5t	10t	1900	510	2690	1935	150	1300	835	1650	385/365	452	210	140	200	145/120	1100
T020B	32t	25t	20t	2100	250	2920	2135	165	1400	835	1725	520/480	460	210	160	250	195/155	1600
T030B	50t	40t	32t	2100	540	2960	2135	165	1400	835	1725	630/590	480	210	160	250	240/190	1900

- For the transportation of coils, rolls and bodies with horizontal axles.
- Manufactured with full quality assurance.
- Grab manufactured in high quality welded steel and both grab legs operated by means of rack and pinion.
- Grab legs operate within sliding guides utilizing both gearing and a torque limiting coupling.
- Wiring system with cabling protected in plastic metallic conduits or alternatively in guide chains supplied complete with electric control panel.
- Documentation: CE certificate of conformity / full technical data supplied.

Options:

- Safety device, sensor controlled to avoid opening of gripping legs whilst under load.
- Indicator to confirm gripping legs are locked in position
- Sliding protection device to ensure against load damage.
- Protective wheels on gripping legs.
- Gripping legs fitted with “SECUTEX” protection.
- Illuminated light signal confirming grabs are under load.

Tractel Solutions SAS develops all types of custom-made lifting beam for handling loads such as containers, long loads, cylinders, crates, boats, big-bags, rings, concrete slabs and many more.

H shaped lifting beam adjustable on request

44t Lifting beam for paper rolls with motorized rotation

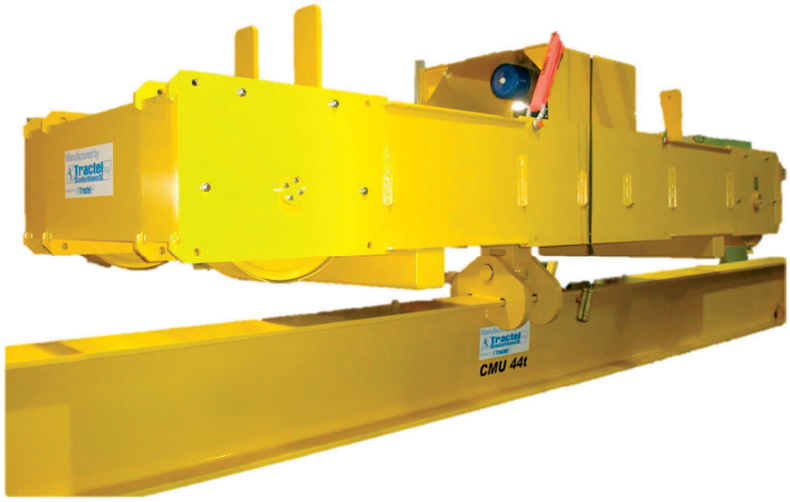

160t lifting beam with integrated sheaves and motorized hook

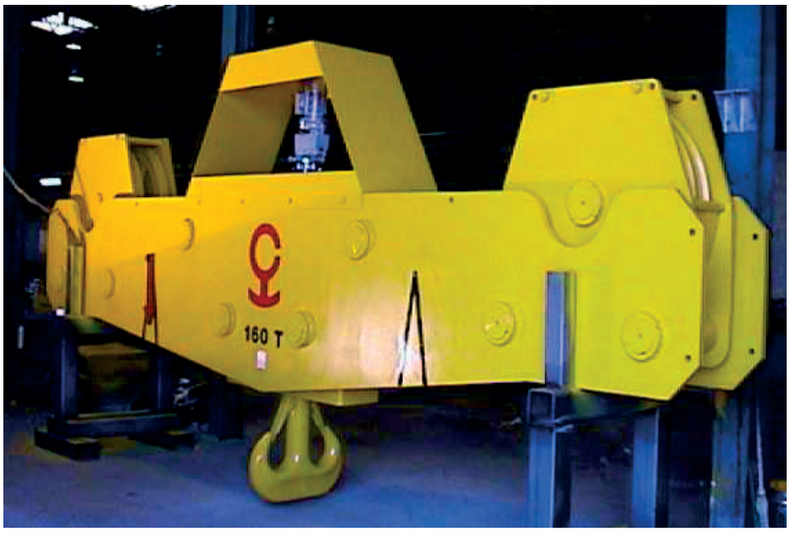

20/40 feet Spreader

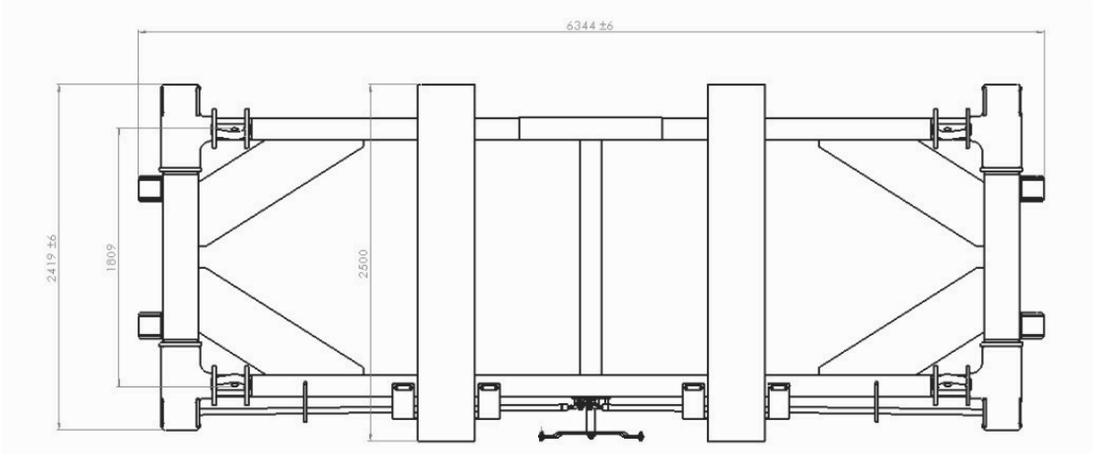

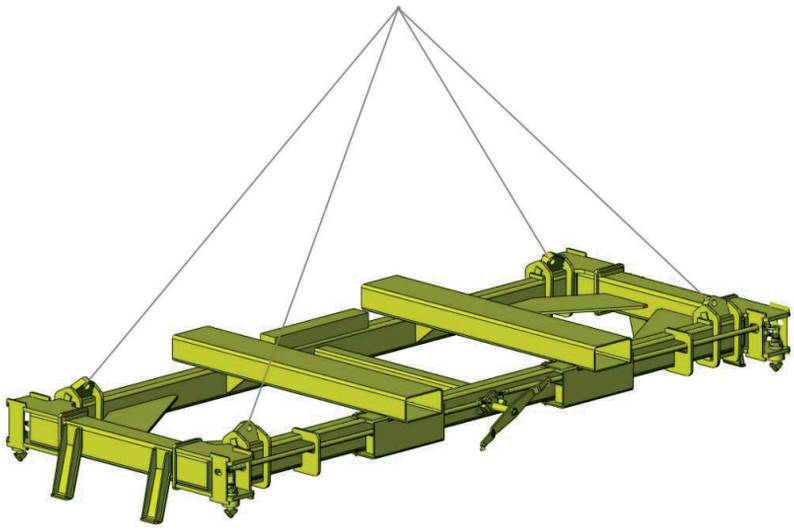

Special beam

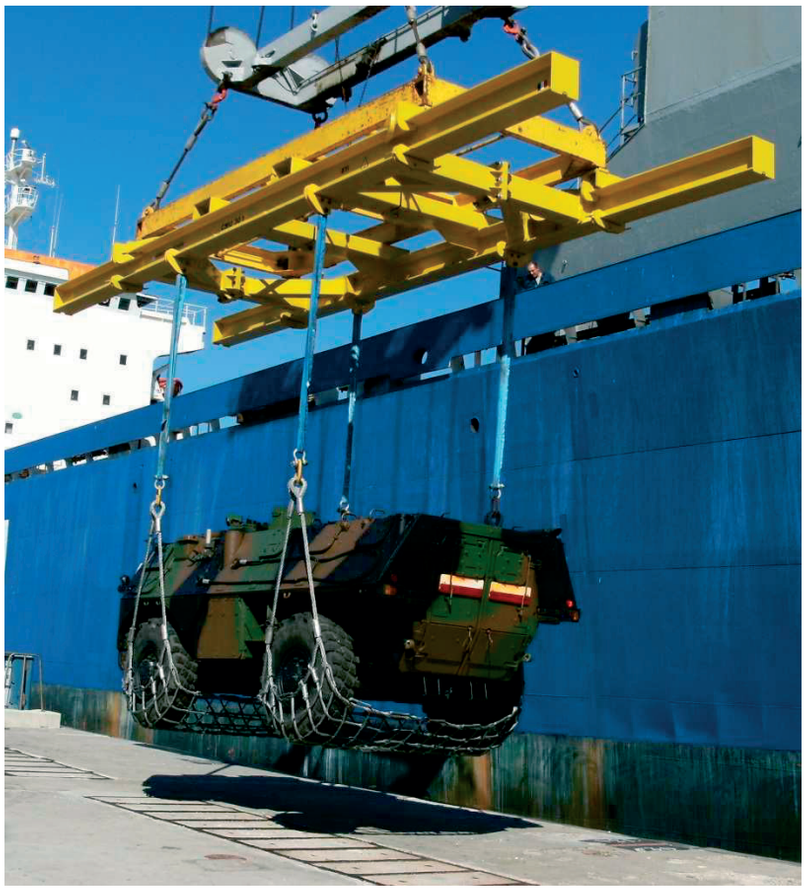

Lifting beam with adjustable lifting points

LOAD TURNER PAL-TURN™

Turning heavy and/or bulky loads can often be difficult and dangerous.
These operations often need a lot of space and people. To perform these operations in good conditions, Tractel® offers several solutions using our the pal-turn™ load turners

Tractel® Solutions offers the pal-turn™ solution: Easy to use, reliable and with very little maintenance, the Pal-turn™ meets today's handling needs.

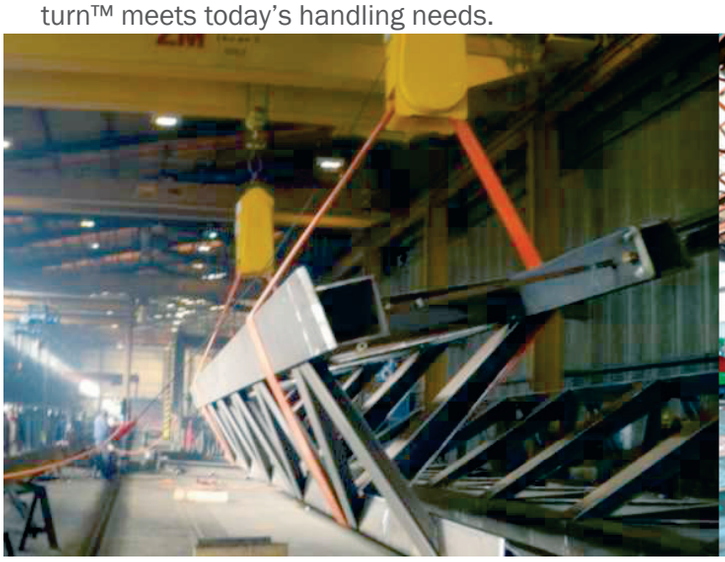

LOAD TURNER PAL-TURN™

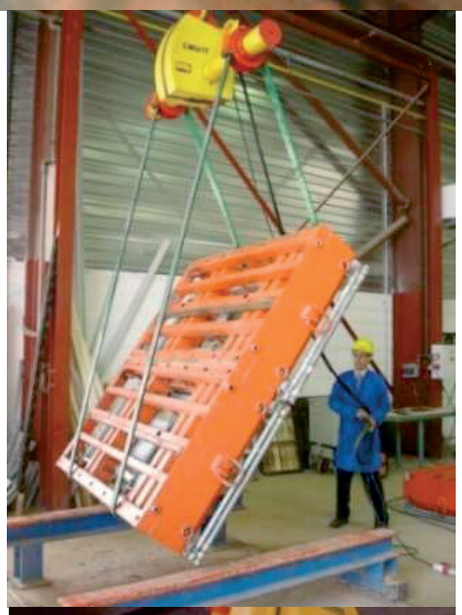

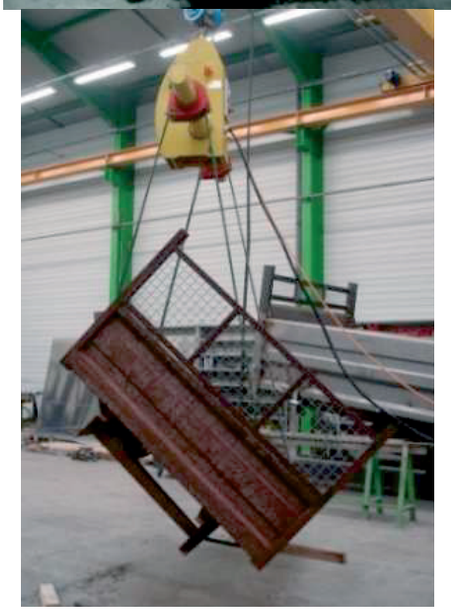

LOAD TURNER PAL-TURN™

Standard load turner device

Advantages

- Productivity : 1 single operator instead of 3
- Time : reduced turning time
- Security : reduction of sliding/slipping risks and/or falling risks
- Space : less floor space required
- Efficiency : only one lifting point is necessary and one machine can be used for several applications
- Quality : no marking or damage of the load
- Maintenance : no jolting of the lifting system

		1 lifting mode	Multiple lifting means
		Pal-turn™ tube	**Pal-turn™ mono-pulley**
		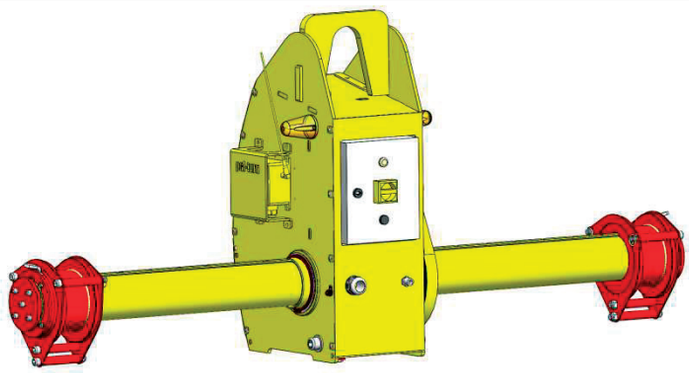	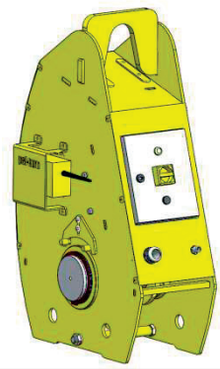
Capacity	Standard	1t/2t/5t/10t/20t/40t	2t/5t/10t/20t/50t
	Special	250kg to 30t and more	
Tube length		1 to 6 meters	/
Length of load		Approximatively 1 to 15 meters according to the load's rigidity	According to the number of mono-pulleys, the lifting means and the load's rigidity
Standard configuration		▪ Wire remote control, Mono-speed motorisation ▪ IP54 electrical protection index ▪ Design according to FEM A5 lifting speed 30 m/min	
Options		▪ Chains pulleys for high temperature loads (> 80°C) ▪ Autonomous model (with batteries) ▪ Remote control with or without infra-red ▪ Double speed motor ▪ Frequency inverter ▪ Supplementary lifting points, Retractable lower hook. This hook avoids putting down the pal-turn™ in order to perform lifting operations between 2 turnings ▪ Chains or straps with length adjusted to the loads' dimensions, polyurethane protection, coated or impregnated, open or endless ▪ Electrical protection index IP55 or higher ▪ Design according to another FEM class	
		▪ Fixed or adjustable load-centre straps ▪ Light and/or sound warning signal when tilting ▪ Handling Framework	

Advantages

Benefits and savings:

- Productivity: 1 single operator instead of 3
- Time: reduced turning time
- Security: reduction of sliding/slipping risks and/or falling risks
- Space: less floor space required
- Efficiency: only one lifting point is necessary and one machine can be utilised for several applications …
- Quality : No marking or damage of the load
- Maintenance : No jolting of the lifting system

➡ Return on investment in a few months!

Optimised design

- Every turning application is unique
- According to the detail supplied in the specification sheet, we simulate the turning and determine the necessary motor power dependent on the length of the straps.
- We can then offer you the correct system from the standard range or design a bespoke pal-turn™ system in order to optimize the weight, dimensions, power and price for your application

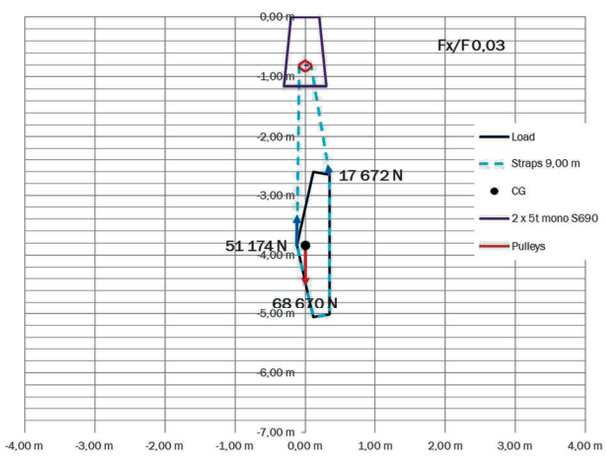

Figure 1 : 0° rotation

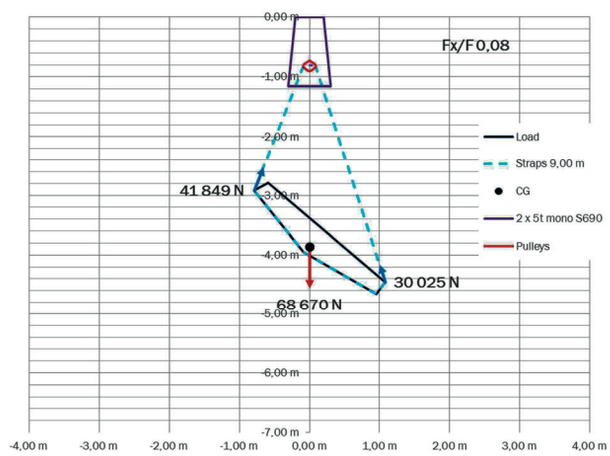

Figure 2 : 45° rotation

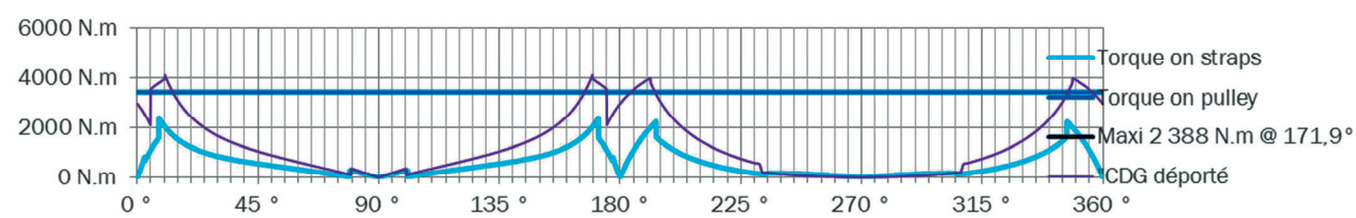

Figure 3 : effect of a 10cm shift of the center of gravity. In purple: center of gravity, in blue: shifted center of gravity. For an identical mass according to the above profile

Try it !

Tractel has pal-turns™ available to trial. Please do not hesitate to contact us

SPECIAL CLAMPS

Tractel Solutions SAS manufactures on request a wide range of lifting clamps, either derivated standard clamps or designed for a special application.

From a simple polyurethane coating on an existing clamp up to a completely new design, Tractel Solutions SAS offers you a solution for your lifting problem!

Clamp for loads with parallel sides

Special clamp for lifting without marking the product with parallel faces and for all type of material.
Manual operation, semi-automatic or fully automatic.
Jaws can be adapted to the geometry of the load.
Can also be mounted for cylindrical loads or other size constraints.
Designed following specifications.
Customized capacity and dimensions.
Designed without bearing welds, according to FEM rules and machine directive 2006/42/CE.

Semi-automatic clamp for handling rounds or cylinders

Special clamp for lifting cylinder or rounds in horizontal axis.
Clamp with manual grip and automatic release.
Jaws equipped with curved plates that can be fitted with additional protections to avoid marks and damages on the load.
Designed following specifications.
Customized capacity and dimensions.
Designed without bearing welds, according to FEM rules and machine directive 2006/42/CE.

Automatic clamp for handling rounds or cylinders

Special clamp for lifting cylinder or rounds in horizontal axis.
Clamp with a fully automatic grip and release.
Jaws equipped with curved plates that can be fitted with additional protections to avoid marks and damages on the load.
Designed following specifications.
Customized capacity and dimensions.
Designed without bearing welds, according to FEM rules and machine directive 2006/42/CE.

Semi-automatic clamp for tubes and pipes

Special clamp for lifting tubes and pipes in horizontal axis.
Clamp with manual grip and automatic release.
Jaws equipped with curved plates to fix interchangeable polyurethane protections (adhesive or screwed) to avoid marks and damages on the load.
Designed following specifications.
Customized capacity and dimensions.
Designed without bearing welds, according to FEM rules and machine directive 2006/42/CE.

Clamp for lifting and turning steel drums

Special clamp for lifting and turning steel drums or other rigid cylindrical product.
Vertical gripping then turning the load at 90° or 180° manually. Indexing at all 90° positions.
Clamp with manual grip and automatic release.
Jaws equipped with curved plates with protection ensuring good grip and prevent marks.
Designed following specifications.
Customized capacity and dimensions.
Designed without bearing welds, according to FEM rules and machine directive 2006/42/CE.

Automatic clamp for lifting and turning steel drums

Special clamp for lifting and turning steel drums or other rigid cylindrical product.
Vertical gripping then turning the load at 180° by means of a reduction gear.
Clamp with a fully automatic grip and release.
Jaws equipped with curved plates with protection ensuring good grip and prevent marks.
Designed following specifications.
Customized capacity and dimensions.
Designed without bearing welds, according to FEM rules and machine directive 2006/42/CE.

Automatic clamp for lifting and turning cylindrical loads

Special Clamp for lifting and turning cylindrical loads with different size (diameter and height).
Parallel arm translation.
Vertical gripping then turning the load at 180° by means of a reduction gear.
Clamp with a fully automatic grip and release.
“V” jaws equipped with protection ensuring good grip and prevent marks
Designed following specifications.
Customized capacity and dimensions.
Designed without bearing welds, according to FEM rules and machine directive 2006/42/CE.

TRACTEL SOLUTIONS SAS
CONDITIONS GENERALES DE VENTE - valables pour les ventes sur le territoire français – v.10/2016

1 FORMATION DU CONTRAT

Toute commande implique de la part de l'acheteur la reconnaissance par l'acheteur d'avoir obtenu du vendeur l'ensemble des informations qui lui sont nécessaires pour la conclusion du contrat et l'acceptation des présentes conditions. De ce fait, aucune clause contraire ni aucunes conditions générales qui auraient été adressées antérieurement par voie de circulaires ne pourront être opposées à Tractel Solutions SAS s'il ne les a pas formellement acceptées par écrit.
Sauf précision contraire, les offres de prix de Tractel Solutions sont valables trente (30) jours à compter de leur date d'émission.
Le contrat de vente n'est parfait qu'après acceptation écrite par Tractel Solutions de la commande de l'acheteur, ou à défaut par la livraison, et versement intégral de l'acompte par l'acheteur.
Une commande acceptée ne peut être annulée sans l'accord de Tractel Solutions.

2 SPECIFICATIONS CONCERNANT LA FOURNITURE

Les caractéristiques mentionnées par les catalogues, prospectus et tous documents publicitaires de Tractel Solutions n'ont qu'une valeur indicative. Tractel Solutions se réserve la faculté d'apporter à ses modèles toutes modifications qu'il jugerait opportunes, même après acceptation des commandes, sans toutefois que les caractéristiques et performances essentielles puissent s'en trouver affectées.

3 PRIX

Les prix s'entendent nets de tout escompte, pour marchandise non emballée, départ usine Saint-Genis-Laval (France). Ils sont libellés en Euros (€).
Les frais éventuels de colisage, chargement et convoyage de l'usine jusqu'au lieu de livraison sont à la charge de l'acheteur, sauf convention contraire écrite.

4 PAIEMENT

Le prix est payable au domicile de Saint-Genis-Laval à raison de :

- trente (30)% d'acompte à la commande par chèque ou virement.
- le solde par traite acceptée à trente (30) jours date de facturation.

Le versement de l'acompte à la commande ne comporte nullement pour l'acheteur la faculté de se dédire moyennant l'abandon de son acompte qui, en cas d'annulation de l'ordre, reste acquis à Tractel Solutions à titre d'indemnité, sous réserve de tous autres droits.

5 RÈGLEMENT

5.1 Le défaut de paiement entraîne la déchéance du terme et rend immédiatement exigibles toutes les créances même non échues. En cas d'impayé de facture, Tractel Solutions se réserve la faculté de suspendre l'ensemble des livraisons en cours ou à venir.

5.2 Retards de paiement

Toute somme non payée à son échéance, ou tout refus d'acceptation d'une lettre de change, entraîne de plein droit et sans mise en demeure préalable, l'application d'une pénalité égale au taux de refinancement de la BCE, majoré de dix (10) points, conformément à l'article L441-6 C.Com. modifié par la loi n°2012-387 du 22 mars 2012, sans pouvoir être inférieur à trois (3) fois le taux d'intérêt légal en vigueur, et sans préjudice de tous dommages et intérêts.
En plus des pénalités de retard, l'acheteur s'exposera au paiement d'une indemnité forfaitaire pour frais de recouvrement d'un montant de 40 euros (article D441-5 C.Com.). Lorsque les frais de recouvrement seront supérieurs au montant de cette indemnité, Tractel Solutions sera en droit de demander une indemnisation complémentaire justifiée.

5.3 Clause pénale

De convention expresse, le défaut de paiement à l'échéance fixée rendra exigible, à titre de clause pénale, une indemnité de quinze (15) % des sommes dues, outre les intérêts conventionnels et les frais judiciaires éventuels.

5.4 Clause de réserve de propriété

Les produits objet de la présente commande resteront de convention expresse la propriété de Tractel Solutions jusqu'au paiement intégral du prix convenu, et tous moyens de paiement - chèques, traites ou autres effets de commerce - ne seront considérés comme valant paiement qu'après encaissement effectif de leur montant par Tractel Solutions.
Pendant la période séparant la livraison du paiement intégral du prix, l'acheteur n'aura, de convention expresse, que la qualité de simple dépositaire des produits objet de la vente, à charge pour lui d'en acquitter le prix aux échéances convenues, ou, faute de règlement d'une seule échéance, d'en payer intégralement le prix ou à défaut, de les rendre, sous peine d'encourir les sanctions prévues par la loi.
Par dérogation à l'article 1196 du Code Civil, la livraison mettra à elle seule les produits aux risques de l'acheteur en dépit du fait que celui-ci n'en sera que le dépositaire jusqu'au paiement intégral.
En conséquence, il devra en assurer la remise en état à ses frais en cas de sinistre, en régler le montant en cas de disparition quelle qu'en soit la cause, et souscrire une assurance à cet effet en faveur de Tractel Solutions jusqu'au paiement intégral du prix.
Du fait de sa qualité de simple dépositaire jusqu'au paiement intégral du prix, l'acheteur auquel les produits auront été livrés n'aura pas le droit de les revendre ou d'en disposer par quelque moyen que ce soit, y compris par voie de constitution de gage, nantissement ou autrement.
Toutefois, il pourra :

- Soit, après accord préalable de Tractel Solutions et sous son entière responsabilité, faire régler directement par son acquéreur le produit objet du présent contrat à Tractel Solutions
- Soit céder le bénéfice et les charges résultant du présent contrat, mais à la condition expresse d'informer son cessionnaire sous sa propre responsabilité que les produits sont grevés d'une clause de réserve de propriété et qu'il n'en est lui-même que dépositaire jusqu'au paiement intégral de leur prix, de telle sorte que ledit cessionnaire n'aura lui-même que la qualité de dépositaire jusqu'à ce paiement, et que Tractel Solutions pourra lui en réclamer le règlement ou la restitution, si le montant du prix ne lui était pas réglé en totalité à l'échéance fixée.

En cas de cession du bénéfice et des charges du présent contrat, l'acheteur et son cessionnaire, lequel deviendra de plein droit dépositaire des produits jusqu'au paiement intégral de leur prix, seront solidaires vis-à-vis de Tractel Solutions de ce paiement.
Dans le cas où l'acheteur-dépositaire (ou son cessionnaire) serait contraint de restituer les produits à Tractel Solutions, faute par lui d'être libéré intégralement du prix aux échéances convenues, les acomptes qui auraient été perçus par Tractel Solutions lui resteraient acquis de plein droit.

6 DÉLAI DE LIVRAISON & LIVRAISON

6.1 Livraison : on entend par livraison la mise à disposition du produit sur le site de Saint-Genis-Laval, notifiée par Tractel Solutions.
6.2 Le délai de livraison est celui porté par Tractel Solutions sur son accusé de réception de commande.
6.3 Les délais de livraison sont donnés à titre indicatif et sans engagement. Le vendeur s'engage néanmoins à faire preuve de diligence et à livrer les produits dans les meilleurs délais.
6.4 Il est expressément convenu que Tractel Solutions ne devra aucune indemnité pour retard, sauf le cas de faute intentionnelle.
6.5 a) L'acheteur prendra livraison de son ou de ses produits dans les locaux de Tractel Solutions dans les huit (8) jours qui suivront la notification de Tractel Solutions que le ou les produits sont prêts à lui être livrés.
b) Au terme de cette période de huit (8) jours, et après une mise en demeure par lettre recommandée avec accusé de réception adressée à l'acheteur pour le sommer d'enlever IMMÉDIATEMENT le ou les produits, Tractel Solutions aura la faculté de contraindre l'acheteur à exécuter ses obligations, notamment à effectuer les paiements, la livraison étant réputée effectuée ; dans ce cas Tractel Solutions pourvoira au stockage aux frais et risques et périls de l'acheteur.
c) Passé le délai prévu à l'article b), Tractel Solutions pourra, si bon lui semble, considérer le contrat comme résilié par l'acheteur, les versements reçus de ce dernier lui restant acquis sans préjudice de tous autres droits, et notamment Tractel Solutions sera en droit d'exiger à titre de clause pénale le paiement d'une indemnité égale à quinze (15) % du prix de vente du matériel. Tractel Solutions pourra alors, après en avoir avisé l'acheteur par lettre recommandée, disposer des produits comme il l'entendra.
d) Les prodits sont livrés accompagnés de leur notice d'instructions ; l'utilisateur devra en prendre connaissance avant la mise en service.
e) Réception : A défaut par l'acheteur d'effectuer une réclamation dans un délai de huit (8) jours suivant la date de livraison, le produit sera réputé dépourvu de tous vices apparents et réceptionné.

7 TRANSPORT ET ASSURANCE

Les mesures que Tractel Solutions peut être amené à prendre dans l'intérêt et pour le compte de l'acheteur en matière d'assurance, de transport, ne prévalent pas contre le principe de la livraison dans son usine ou magasin.
Le fait d'inclure éventuellement le coût du transport dans le prix ne constitue pas une dérogation au principe de la livraison effectuée dans l'usine ou le magasin de Tractel Solutions. Tout transport effectué par la société Tractel Solutions elle-même, que les frais en soient ou non à la charge de l'acheteur, est réputé fait suivant un contrat de transport distinct du contrat de vente.
En l'absence d'instructions, Tractel Solutions procède à l'expédition au mieux des intérêts de l'acheteur. Le matériel n'est assuré que sur demande expresse de l'acheteur.
Dans tous les cas, il appartient à l'acheteur d'effectuer toutes vérifications, de faire toutes réserves à l'arrivée du produit et d'exercer, s'il y a lieu, contre le transporteur, les recours devant être effectués dans les trois (3) jours suivant la réception, prévus par les articles L133-1 et L133-3 du code de commerce ; à défaut d'observation de ces formalités la responsabilité du transporteur ne pourra être mise en œuvre et Tractel Solutions ne pourra en aucun cas être recherché de ce fait.

8 GARANTIE

8.1 Durée et étendue de la Garantie

– Tout produit est garanti contre tous défauts de matière et vices de construction pendant une durée de douze (12) mois à compter de la date figurant sur la facture.
8.2 a) Cette garantie est strictement limitée au remplacement ou, à la convenance de Tractel Solutions, à la réparation de pièces mécaniques reconnues défectueuses par Tractel Solutions, à l'exclusion expresse de toutes dépenses accessoires.
b) Cette garantie ne couvre pas les avaries résultant de mauvaise utilisation, d'un entretien insuffisant ou d'une usure normale ; elle ne s'applique pas aux peintures et revêtement de surface.
8.3 Les réparations effectuées au titre de la garantie commerciale seront réalisées dans les locaux désignés par Tractel Solutions, le transport des équipements jusque dans les dits locaux restant à la charge de l'acheteur.
8.4 Les échanges ou remises en état des pièces faits au titre de la garantie ne peuvent avoir pour effet de prolonger celle-ci. Les pièces remplacées au titre de la garantie commerciale deviennent la propriété de Tractel Solutions.
8.5 Tout défaut mettant en jeu la garantie de Tractel Solutions doit, sous peine de déchéance, être déclaré par lettre recommandée avec accusé de réception adressé au siège social de Tractel Solutions, dans un délai maximal de dix (10) jours à partir du moment où l'acheteur en a eu connaissance ou aurait dû en avoir connaissance.
8.6 La responsabilité de Tractel Solutions est expressément limitée à la garantie définie ci-dessus.
8.7 Le recours à la garantie ne peut justifier aucun retard dans les paiements.

9 RESPONSABILITE

En aucune circonstance, Tractel Solutions ne sera tenu d'indemniser les dommages immatériels ou indirects, notamment toutes pertes d'exploitation, de profit ou manque à gagner. La responsabilité civile de Tractel Solutions, toutes causes confondues à l'exception des dommages corporels et de la faute lourde, est limitée à une somme plafonnée au montant facturé et encaissé de la fourniture prétendue défectueuse.
L'acheteur se porte garant de la renonciation contractuelle contre Tractel Solutions ou ses assureurs au delà des limites et exclusions fixées ci-dessus.

10 JURIDICTION

De convention expresse, toutes contestations ou difficultés quelconques relatives à l'interprétation ou à l'exécution de la présente commande seront de la COMPÉTENCE du TRIBUNAL DE COMMERCE de LYON (69) et ce, même en cas de demande incidente, de demande en garantie, de pluralité de défendeurs, qu'il

TRACTEL SOLUTIONS SAS

GENERAL SALES TERMS - for export sales of handling and lifting equipment - v. 10/2016

1 CONTRACT FORMATION

Any order implies from the buyer, the acknowledgement by the buyer that he gets all required information to the conclusion of the agreement and the acceptance of the present terms. Save for contrary provisions, these General Conditions are applicable. No contrary clause, may be set up against Tractel Solutions (hereinafter the "seller") if he has not formally accepted it in writing and notably all the general purchase terms sent earlier by way of circular letters.

Failing specific indication, the seller's offer shall be valid for thirty (30) days from the date of the issue.

The sales contract is only valid insofar as the seller has accepted the buyer's order in writing and collected the down payment.

An order which is accepted cannot be cancelled without the seller's consent.

2 SPECIFICATIONS CONCERNING THE SUPPLY

Characteristics indicated in all the seller's catalogues, leaflets and all advertising documents are for information purposes only. The seller reserves the right to carry out all changes he may consider appropriate on his models even after acceptance of the orders. Said modifications shall not alter the essential characteristic and performance of the material or equipment, subject matter of the sale.

3 PRICE

Prices are understood free of any discount for non-packaged goods, ex-works Saint-Genis-Laval (France). All prices are in Euros (€).

Any possible costs for packaging, loading and conveying from the factory to the place of delivery shall be borne by the buyer, unless otherwise agreed in writing.

4 PAYMENT TERMS

Save for different provisions specified in the special terms appearing on the front page, payments are performed at the seller's legal address, net, without rebate and are payable with the terms here under:

- thirty (30)% by bank transfer on order (down payment).
- the balance by accepted draft 30 days from the date of invoicing.

The payment of the down payment with the order does not in any way entitle the buyer to retract in return for giving up his down payment which, in the event of cancellation of the order, remains acquired to the seller as a compensation, subject to all rights.

5 SETTLEMENT

5.1 The non-payment entails the event of default and causes all debts even not outstanding ones are immediately due. In case of any default of payment on the agreed due date, Tractel Solutions SAS reserves the right to suspend all pending orders.

5.2 **Penalties for delays and compensation for recovery costs**

Any default of payment on the agreed due date entails ipso jure and without further notice to perform, the application of a penalty equal to the refinancing rate of the ECB increased by ten (10) points, in compliance with French law and the EC Directive2011/7/UE, without prejudice to payment of all damages. This rate will be by no mean lower than three (3) times the legal French rate.

In addition to penalties for delay, and due to late payment, the buyer, de jure and without prior formal demand, shall pay recovery costs equal to 40 euros. The seller will be entitled to obtain compensation from the buyer for any recovery costs exceeding that fixed sum and incurred due to the buyer's late payment.

5.3 **Penalty clause**

By express agreement, the non-payment on the due date shall entail, as a penalty clause, a compensation of 15% of the amounts due, plus the interest set in the agreement and any possible costs of litigation.

5.4 **Reservation of ownership clause**

The products, subject-matter of the present order, shall remain by formal agreement the seller's property until full payment of the agreed price, and all means of payment - cheques, drafts or other negotiable instruments - shall be considered as payment only after the actual collection of their amount by Tractel Solutions.

During the period between the delivery and the full payment of the price, the buyer, by formal agreement, shall only be considered as the simple depository of the products, the buyer shall have to pay the price on agreed due dates, or failing payment of a single payment, to pay the full price or, to return the products, or if not he shall incur the penalties provided for by the law.

As an exception to article 1196 of the French Code of Civil Law, the delivery itself shall place the products at the buyer's risks despite the fact the latter is only the depository until full payment is made.

Consequently, the buyer is responsible for all damages that goods may suffer for any reason whatsoever and shall subscribe an insurance in favour of Tractel Solutions until payment of the full price.

On account of his capacity of simple depository until the full payment of the price, the buyer to whom the products are delivered will not be entitled to resell them or to alienate them by any mean, including by way of contract of pledge, security or otherwise.

However, he may:

- Either, after prior agreement of the seller and under its entire liability, have its buyer pay directly the product subject-matter of the present agreement to the seller.
- Or assign the benefit and the charges resulting from the present agreement, but on the formal condition of informing its assignee under its own liability that the products are subject to a reservation of title clause and that himself is only the depository until full payment of their price, in such a manner that said assignee has himself only the capacity of depository until the payment, and that the seller may be able to claim from him the payment or the return, if the amount of the price is not paid in whole on the date due.

6 DELIVERY TIME and DELIVERIES

6.1 Delivery: here means the placing at disposal of the product on the site Saint-Genis-Laval notified by Tractel Solutions.

6.2 The delivery time is the date entered by Tractel Solutions on its acknowledgment of receipt of the order.

6.3 Delivery times are given for information purposes and without commitment. The seller commits to deliver promptly the goods to the buyer.

6.4 It is expressly agreed that Tractel Solutions shall owe no compensation for delay, except in the event of deliberate tortious intent.

6.5 a) The buyer shall take delivery of its product(s) in the seller's premises within 8 days following the notification of the seller that the product(s) are ready for delivery.

b) At the end of this 8-day period, and after a formal demand by registered letter with advice of delivery sent to the buyer to remove the product(s) IMMEDIATELY, the seller shall be entitled to force the buyer to perform its obligations, notably to make the payments, the delivery being considered as made; in this case the seller shall store the products at the buyer's risks.

c) After the time-limit provided for in article b), the seller shall be able, if it deems this appropriate, to consider the agreement as terminated by the buyer, the payments received from the latter being acquired to him without prejudice of any other rights, and notably the seller shall be entitled to demand as a penalty clause the payment of a compensation equal to 15% of the sale price of the equipment. The seller shall then, after advising the buyer by registered letter, use the products as it wishes.

d) The products are delivered with their instructions manual for use; the user shall read them before using the products. The buyer shall check and see if he has the documents, if not it shall contact the seller to get them.

e) Acceptance: Without any claims within 8 days following the date of delivery, the product shall be considered as without any visible defects and accepted.

7 TRANSPORT AND INSURANCE

The steps the seller may be led to take in the interest and on behalf of the buyer as regards insurance, transport, do not prevail against the principle of the delivery in the factory or store of the seller.

The fact of possibly including the transport cost in the price does not constitute an exemption to the principle of the delivery made in the factory or the store of the seller. Any transport made by the seller itself, whether the costs are to be paid for by the buyer or not, is considered as made according to a contract of carriage separate from the sale agreement.

If there are no instructions, the seller dispatches the goods in the best interests of the buyer.

In all cases, it is up to the buyer to check everything, to make all reservations upon the arrival of the product and to lodge, if the need arises, against the carrier the appeals, which must be lodged within 3 days following the acceptance, provided for by articles L133-1 and L133-3 of the French commercial Code; should these formalities not be complied with, the carrier's liability may not be implemented and the seller cannot in any case be sued for this reason.

8 WARRANTY

8.1 Term and extent of the Warranty

All products are guaranteed against defects in material and construction faults for a period of 12 months from the date appearing on the invoice.

8.2 (a) This warranty is strictly limited, after examination of the product by the seller and to suit its convenience, to the repair or replacement of the product recognized as defective, with the express exclusion of all accessory costs (b). Are only covered by the warranty the cost of replaced parts and labour used.

(b)The warranty does not cover the damage resulting from bad assembly, insufficient maintenance, or normal wear. It does not apply to paints and coatings.

8.3 Travel costs and hotel expenses for the personnel on the user's site as well as transport costs of the product concerned at the seller's factory and return are to be paid for by the beneficiary of the warranty.

8.4 Exchanges or repairing of parts covered by the warranty cannot extend the warranty. Replaced parts become the seller's property and shall be returned to this party immediately pursuant to such replacement.

8.5 Any defect bringing into play the seller's warranty must, failing forfeiture, be declared by registered letter with acknowledgement of receipt to the seller legal address, with the invoice corresponding to the purchase of the product in question within 10 days.

8.6 The seller's liability is expressly limited to the above-mentioned warranty.

8.7 An action to enforce the warranty cannot justify any delay in payments.

9 LIABILITY

Under no circumstances, shall the seller be held to indemnify the consequential direct or indirect damage or contingent damage, notably any operating losses, loss of profits or loss of earnings. The civil liability of the seller, all causes taken into account with the exception of bodily injuries and gross negligence, is limited to a sum with an upper limit fixed at the amount invoiced and collected of the supply alleged defective.

The buyer is responsible for the waiver in contract against the seller or its insurers beyond the limits and exclusions fixed above.

10 JURISDICTION AND APPLICABLE LAW

The parties agree to endeavour to settle their disputes amicably, before referring to the competent Court. Failing such settlement, the COMMERCIAL COURT of LYON (FRANCE) is alone competent, whatever the sales conditions and payment method, even in the event of warranty implementation or several defendants.

FRENCH LAW ALONE GOVERNS THIS CONTRACT.

AMERICA

CDN

Tractel Ltd.
11020 Mirabeau Street
Montréal, QC H1J 2S3 Canada
Phone: +1 514 493 3332
Fax: +1 514 493 3342
tractel.canada@tractel.com

USA

Tractel Inc.
168 Mason way Unit B2
City of Industry, CA 91746 USA
Phone: +1 626 937 6727
Fax: +1 626 937 6730
tractel.usa-west@tractel.com

51 Morgan Drive
Norwood, MA 02062 USA
Phone: +1 781 401 3288
Fax: +1 781 826 3642
tractel.usa-east@tractel.com

MEX

Tractel Mexico S.A de C.V.
Galileo #20, Oficina 504. Colonia Polanco
Mexico, D.F. CP. 11560
Phone: +52 55 6721 8719
Fax: +52 55 6721 8718
tractel.mexico@tractel.com

ASIA

CHN

Shanghai Tractel Mechanical Equip. Tech. Co. Ltd.
No.255 Cai Lun road,
Zhang Jiang Hi-tech Park
Shanghai 201203 People's Republic of China
Phone: +86 21 6322 5570
Fax : +86 21 5353 0982
info.china@tractel.com

SGP BRU CL MAL RI

Tractel Singapore Pte Ltd
50 Woodlands Industrial Park E7
Singapore 757824
Phone: +65 6757 3113
Fax: +65 6757 3003
enquiry.singapore@tractel.com

EUROPE

D A

Tractel Greifzug GmbH
Scheidtbachstrasse 19-21
Bergisch Gladbach 51469 Germany
Phone: +49 22 02 10 04-0
Fax: +49 22 02 10 04 70
info.greifzug@tractel.com

E

Tractel Iberica S.A.
Carretera del Medio, 265
L'Hospitalet (Barcelona) 08907 Spain
Phone : +34 93 335 11 00
Fax : +34 93 336 39 16
infotib@tractel.com

C/ Atalaya, 2 Nave 4
Pol. Ind. El Alamo
Fuenlabrada (Madrid) 28946 Spain
Phone: +34 91 642 46 45
Fax: +34 91 642 04 98
infotib@tractel.com

F

Tractel S.A.S.
RD 619 Saint-Hilaire-sous-Romilly
BP 38
Romilly-sur-Seine 10102 France
Phone: +33 3 25 21 07 00
Fax: +33 3 25 21 07 11
info.tsas@tractel.com

Tractel Solutions SAS
77-79 rue Jules Guesde
St Genis-Laval 69230 France
Phone: +33 4 78 50 18 18
Fax: +33 4 72 66 25 41
info.tractelsolutions@tractel.com

GB IRL

Tractel (UK) Limited
Old Lane Halfway
Sheffield S20 3GA United Kingdom
Phone: +44 114 248 22 66
Fax: +44 114 247 33 50
sales.uk@tractel.com

I

Tractel Italiana SpA
Viale Europa 50
Cologno Monzese (Milano) 20093 Italy
Phone: +39 02 254 47 86
Fax: +39 02 254 71 39
infoit@tractel.com

NL B DK L

Tractel Benelux BV
Paardeweide 38
Breda 4824 EH The Netherlands
Phone: +31 76 54 35 135
Fax: +31 76 54 35 136
sales.benelux@tractel.com

P ANG MOC

Lusotractel Lda
Bairro Alto Do Outeiro Armazém
1 Trajouce
S. Domingos de Rana (Lisboa)
2785-653 Portugal
Phone: +351 214 459 800
Fax: +351 214 459 809
comercial.lusotractel@tractel.com

PL

Tractel Polska Sp. Zo.o.
ul. Bysławska 82
Warszawa 04-993 Poland
Phone:+48 22 616 42 44
Fax:+48 22 616 42 47
tractel.polska@tractel.com

RUS

Tractel Russia O.O.O.
ul. Petrovka, 27
Moscow 107031 Russia
Phone: +7 495 989 5135
Fax: +7 495 989 5135
info.russia@tractel.com

ANY OTHER COUNTRIES:

Tractel S.A.S.
RD 619 Saint-Hilaire-sous-Romilly
BP 38
Romilly-sur-Seine 10102 France
Phone: +33 3 25 21 07 00

Special Products - P 6128 GB - rev 2 - Tractel Solutions SAS